ECE 320 - Final pt2. Name _____

Transistors and Op-Amps. April 11, 2018

1) A silicon transistor has the following characteristics:

- $V_{be} = 0.7V$ when Ibe > 0
- $V_{ce:sat} = 0.2V$
- $\beta = 100$

Draw the load-line for the following circuit and determine the operating point when Vin = 1V, 5V, and 10V.

Load Line	(Vce, Ic) when Vin = 1V	(Vce, Ic) when Vin = 5V	(Vce, Ic) when Vin = 10V
show on graph	show on graph	show on graph	show on graph

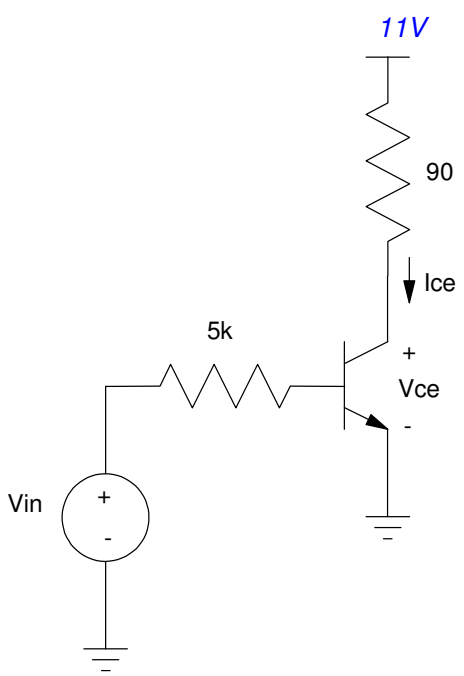

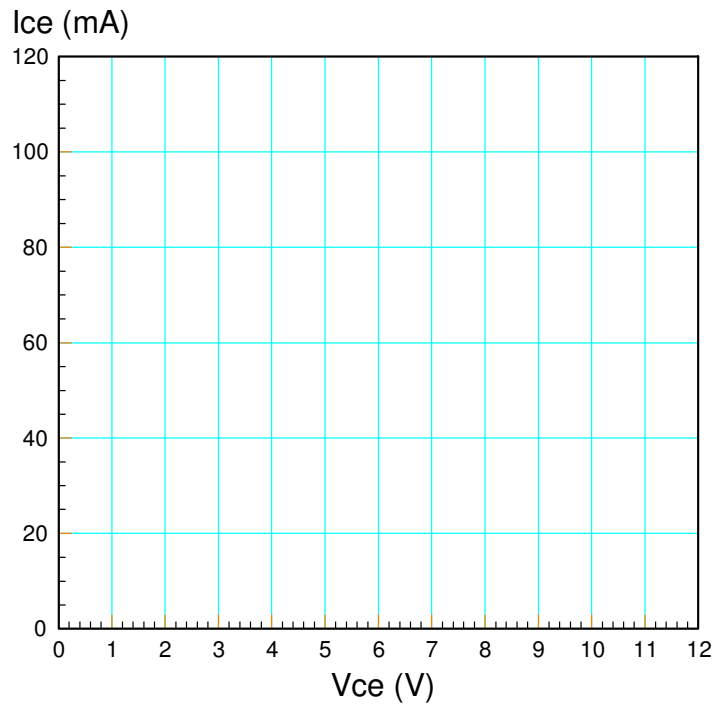

2) Determine Rc and the range of Rb so that the following transistor switch allows the input to turn on and off the current to an LED

- Off current = 0mA
- On Current = 250mA

Assume the LED has the following characteristics

- Vf = 3V @ 200mA

Assume the transistor has the following charactieristics

- $V_{be(on)} = 0.7V$
- $V_{ce(sat)} = 0.2V$

The input can supply at most 20mA

min(Rb) Smallest Rb can be	max(Rb) Largest Rb can be	Rc Current = 250mA when Vin = 5V

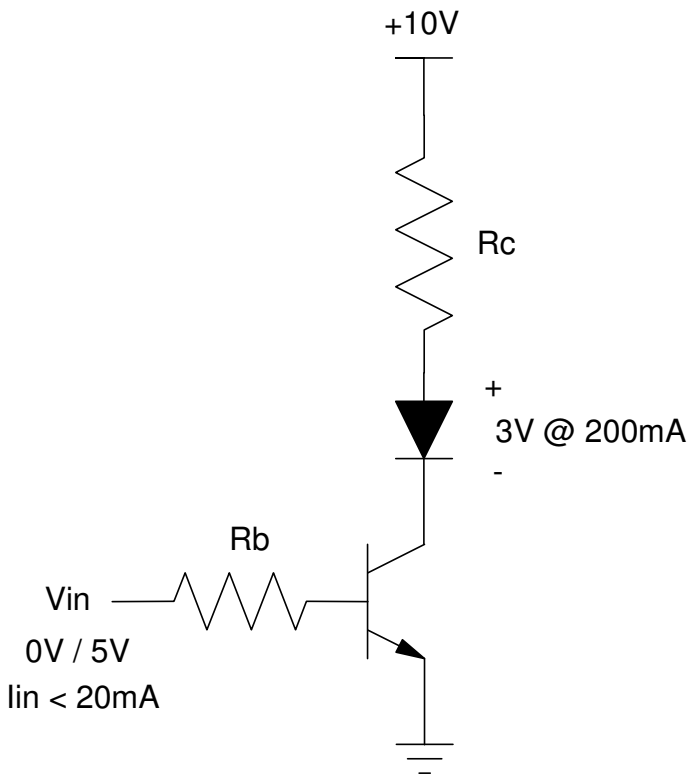

3) Determine the voltages and currents to the followign H-bridge. Assume

- $|V_{be(on)}| = 0.7V$
- $|V_{ce(sat)}| = 0.2V$
- $\beta = 100$

I1	Va	I3	Vb	I5

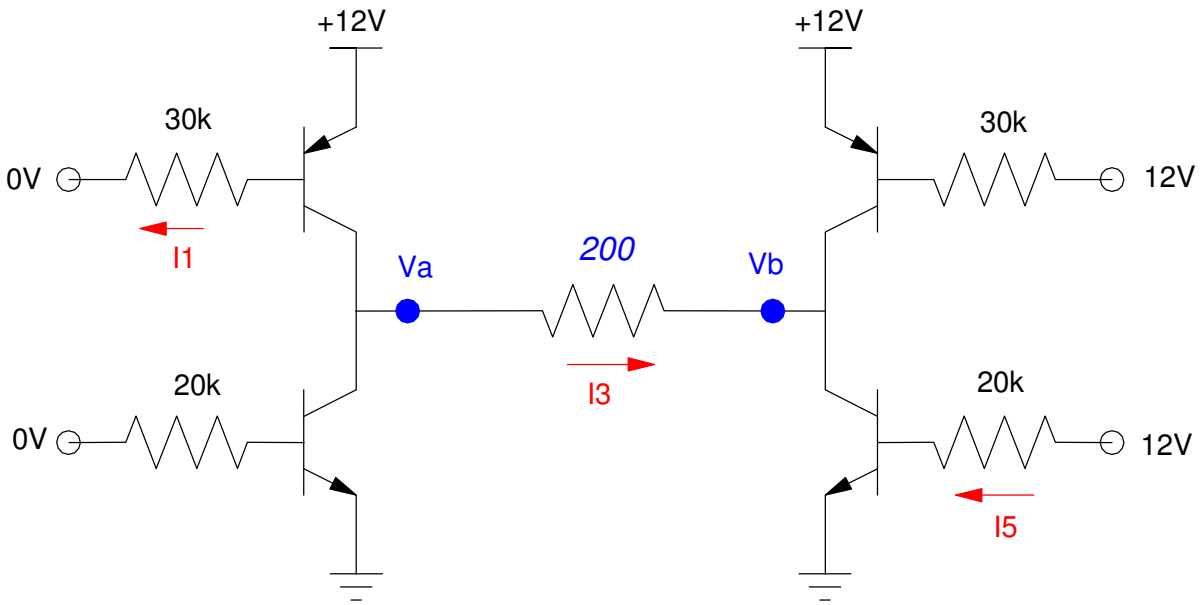

4) Design a Schmitt Trigger so that the output is

- 5V when R > 3k
- 0V when R < 2k
- No change for 2k < R < 3k

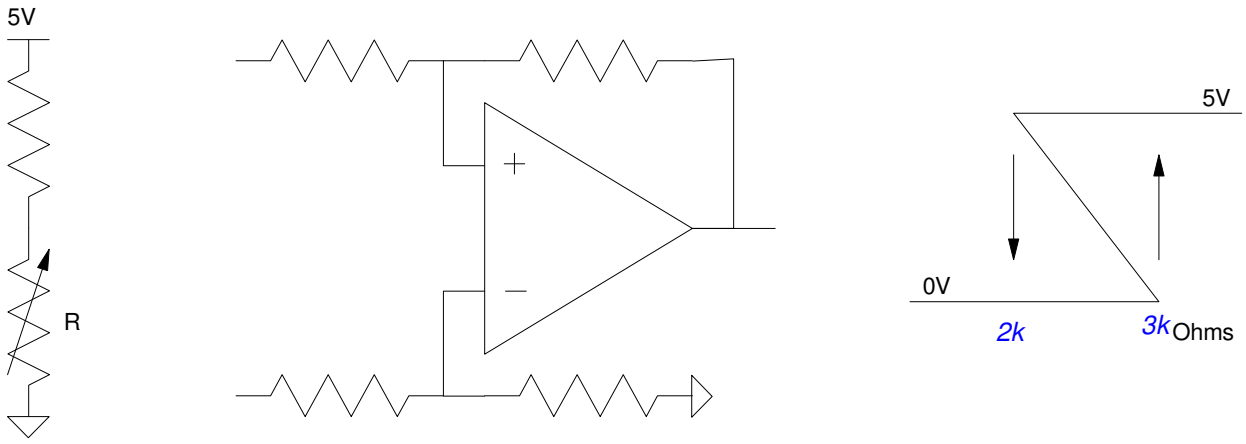

5) Determine the voltages and currents for the following DTL NAND gate. Assume

- Ideal silicon diodes (Vf = 0.7V)
- $\beta = 100$
- $V_{ce(sat)} = 0.2V$

I1	I2	Va	Vb

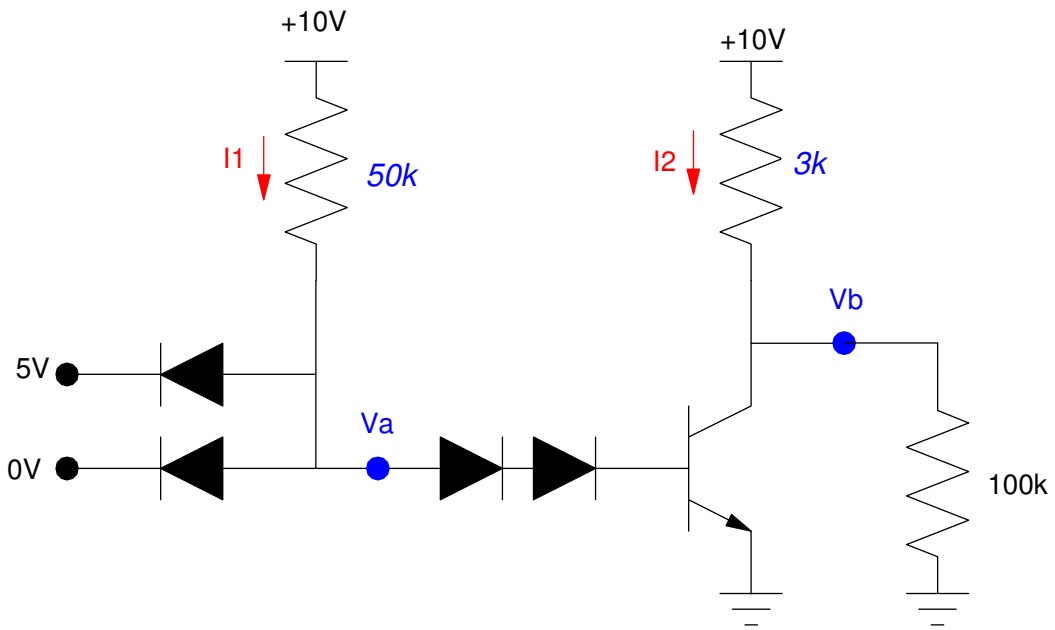

6) The following connects two transistors as a Darlington pair. Determine the voltages and currents. Assume

- Ideal silicon diodes (Vf = 0.7V)
- $\beta = 100$

V1	V2	V3	I4	I5