ECE 320 - Homework #8

Schmitt Triggers, Boolean Logic, DTL Logic. Due Monday, March 5th, 2018

Assume

- MCP602 op-amps which operate at 0V / 5V and are capable of driving up to 30mA.
- 3904 NPN transistors which are capable of driving up to 200mA and have a current gain of 100.
- A temperature sensor has the relationship

$$R = 1000 \cdot \exp\left(\frac{3905}{T} - \frac{3905}{298}\right)\ \Omega$$

  where T is the temperature in degrees Kelvin (0 Celsius = 273 Kelvin).
- A DC motor which draws 200mA at 10V.

1) Design a comparitor circuit which outputs

- 0V when when the temperature is below 30C
- 5V when the temperature is above 30C

2) Modify this circui tso that it can drive a DC motor which draws 200mA at 10V when turned on.

3) Build this circuit in lab and verify your design. (note: use a decade resistor in place of the temperature sensor when verifying what temperature / resistance the motor turns on).

4) Design a Schmitt Trigger which outputs

- 0V when the temperature drops below 30C,
- 5V when the temperature goes above 35C, and
- No change for 30C < T < 35C

Boolean Logic

5) Design a circuit using NAND gates (circle the ones) to implement the following logic:

6) Design a circuit using NOR gates (circle the zeros) to implement the following logic:

Y = f(A,B,C,D)

AB \ CD	00	01	11	10
00	1	0	0	0
01	1	1	0	1
11	x	x	x	x
10	1	1	x	x

DTL Logic (over)

DTL Logic

7) Determine the voltages for the following DTL AND gate

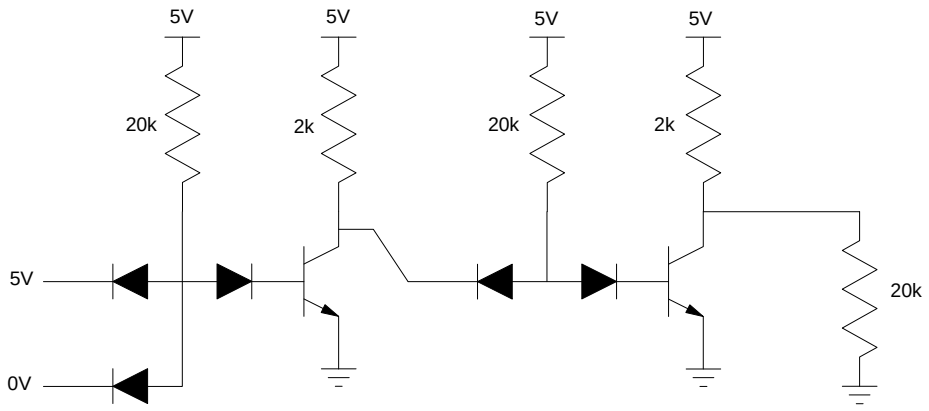

8) Determine the voltages for the following DTL AND gate