ECE 320 - Homework #9

TTL Logic, MOSFET Theory, MOSFET Switches. Due Monday, March 19th

TTL Logic:

1) Determine the voltages and currents for the following TTL AND gate. Assume ideal silicon diodes and transistors with $\beta = 100$.

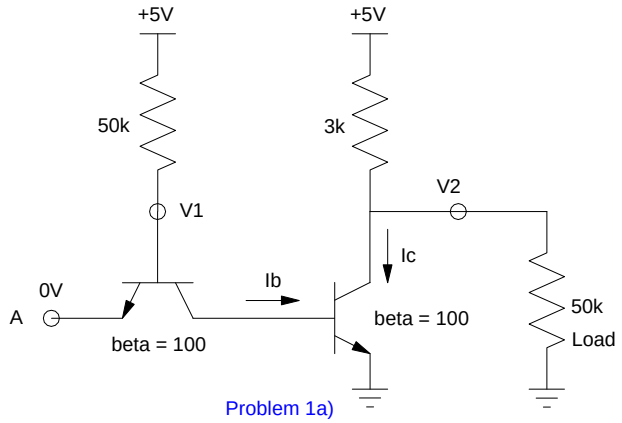

Problem 1a)

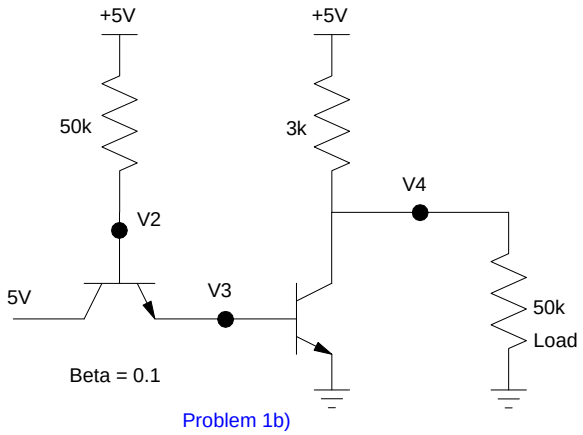

Problem 1b)

MOSFET:

2a) Label the Off / Saturated / Ohmic regions for the following n-channel MOSFET

2b) Determine the transconductange gain, kn (V_{th} = 1.0V)

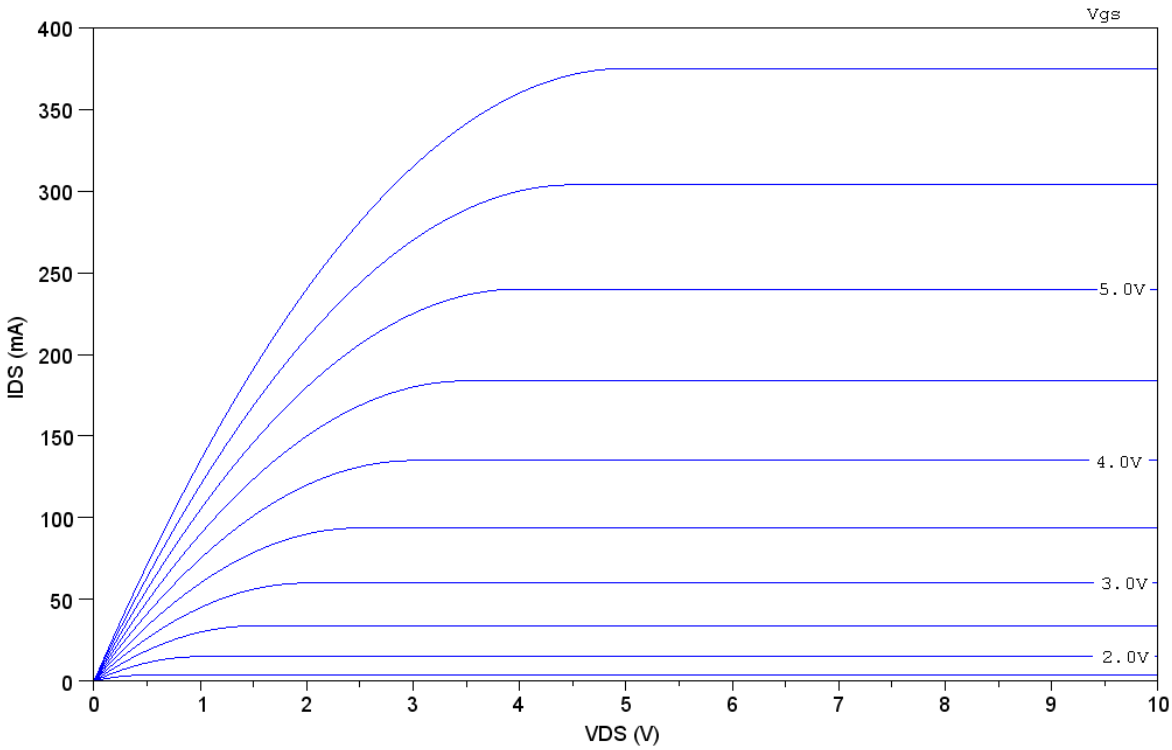

3a) Draw the load line for the following circuit on the previous graph

3b) Determine the Q-point (Vds, Ids) when

- Vg = 0V
- Vg = 3V
- Vg = 6V

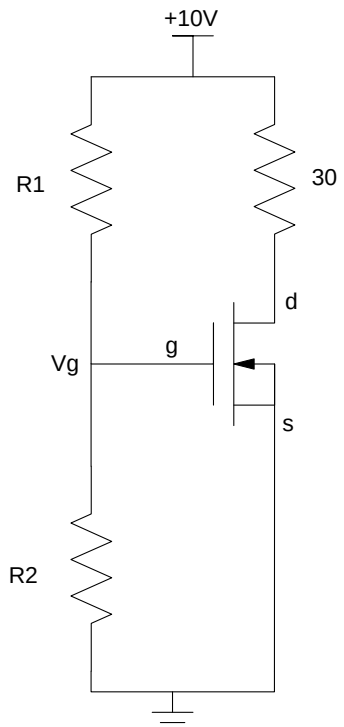

Assume a AOT2618L n-channel MOSFET:

- 23A max continuous current Ids
- 70A max pulse current
- 19 mOhm @ 20A @ Vgs = 10V
- Vth = 2.5V (max)
- $0.72 (qty = 100)
- Digikey part number: 785-1438-5-ND

4) Determine the transconductance gain, kn

5) Determine the voltages for the MOSFET circuit to the right

6) Modify this circuit so that Ids = 1A when Vin = 5V.

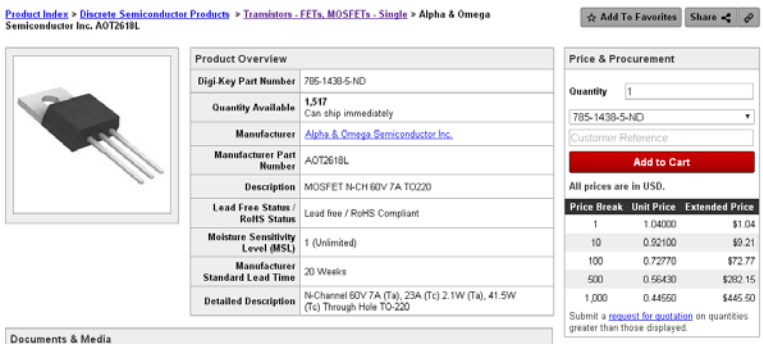

Product Index > Discrete Semiconductor Products > Transistors - FETs, MOSFETs - Single > Alpha & Omega Semiconductor Inc. AOT2618L

Add To Favorites | Share

Product Overview

Digi-Key Part Number	785-1438-5-ND
Quantity Available	1,517 Can ship immediately
Manufacturer	Alpha & Omega Semiconductor Inc.
Manufacturer Part Number	AOT2618L
Description	MOSFET N-CH 60V 7A TO220
Lead Free Status / RoHS Status	Lead free / RoHS Compliant
Moisture Sensitivity Level (MSL)	1 (Unlimited)
Manufacturer Standard Lead Time	20 Weeks
Detailed Description	N-Channel 60V 7A (Ta), 23A (Tc) 2.1W (Ta), 41.5W (Tc) Through Hole TO-220

Price & Procurement

Quantity 1

785-1438-5-ND

Customer Reference

Add to Cart

All prices are in USD.

Price Break	Unit Price	Extended Price
1	1.04000	$1.04
10	0.92100	$9.21
100	0.72770	$72.77
500	0.56430	$282.15
1,000	0.44550	$445.50

Submit a request for quotation on quantities greater than those displayed.

Documents & Media