# ECE 320 - Quiz #4. Name _____

AC to DC Converters, Max/Min Circuits, Clipper Circuits. February 9, 2018

1) For the following DC to AC converter, determine the voltages at V1 and V2.

| V1 | | V2 | |
|---|---|---|---|
| DC max(V1) | AC V1pp | DC mean(V2) | AC V2pp |
| 19.3V | 1.608Vpp | 18.5V | .412Vpp |

max ~~peak~~ - $\frac{1}{2}$ Vpp

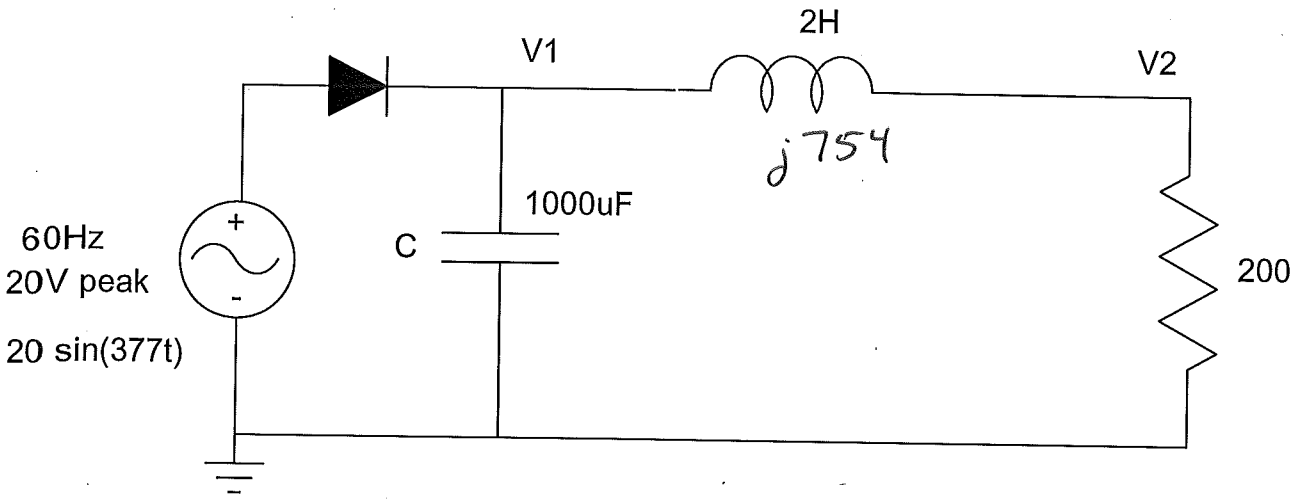


$$I = C\frac{dv}{dt}$$

$$\frac{19.3V}{200\Omega} = 1000\mu F \cdot \frac{dv}{1/60}$$

$$dv = 1.608\ V$$

$$V_{2pp} = \left(\frac{200}{200 + j754}\right)(1.608V_{pp})$$

$$= .412V_{pp}$$

2) For the following DC to AC converter, determine R, L, and C so that

- 250mA flows through the load
- V1pp = 2Vpp
- V2pp = 0.5Vpp

| C | L | R |
|---|---|---|
| 2083 μF | .819H | 77.2Ω |

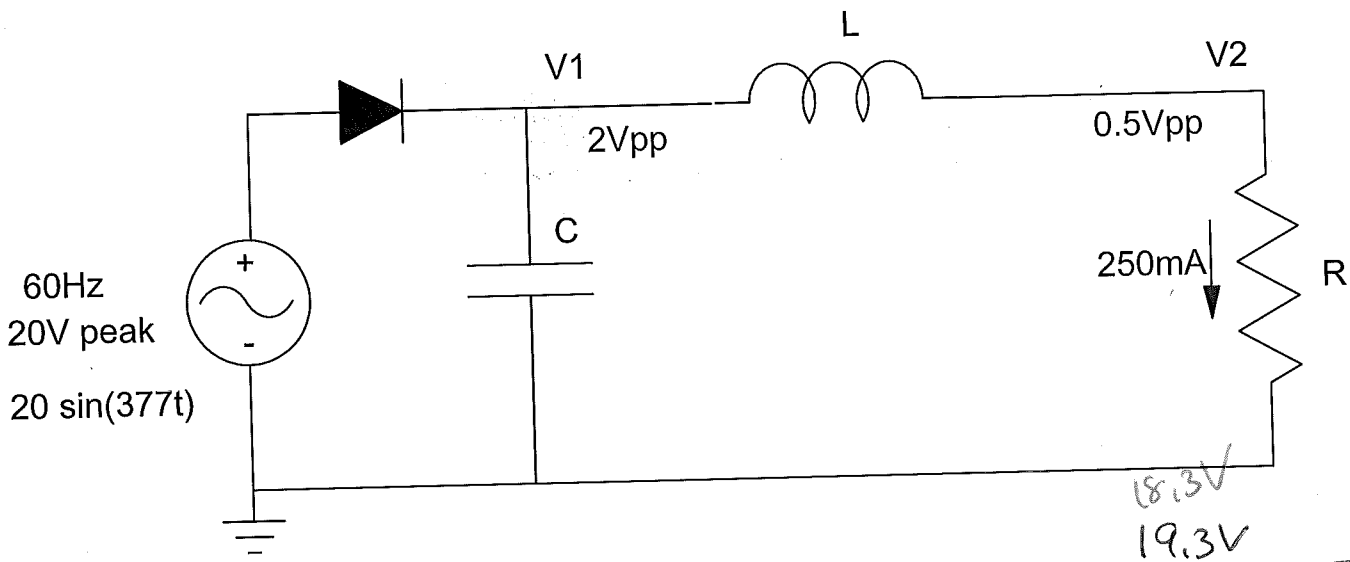


18.3V

19.3V / 250mA = 77.2Ω

AC Wall Transformer

$I = C \frac{dV}{dt}$

$.25A = C \cdot \frac{2V}{1/60s}$

$C = 2083\mu F$

$\omega L = 4R$

$(377) \cdot L = 4 \cdot 77.2$

$L = .819H$

3) Determine the currents for the following max/min circuit

| I1 | I2 | I3 | I4 | I5 | I6 |
|---|---|---|---|---|---|
| 4.7mA | 0 | .6mA | 0 | 7.3mA | 0 |

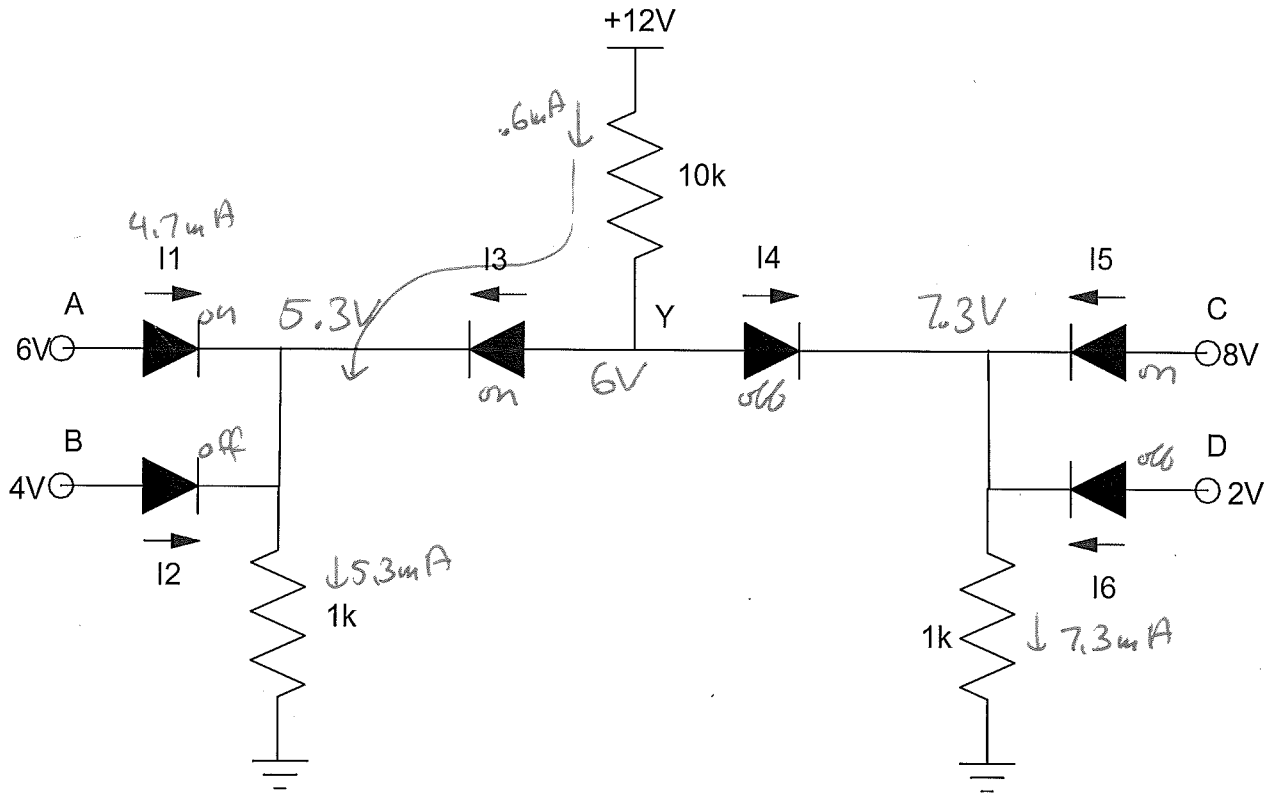

4) Determine R and Vz so that the following clipper circuit has the following Vin / Vout relationship

| R0 | Vz1 | R1 | Vz2 | R2 |
|---|---|---|---|---|
| 1.5k | 5V | 1500 | 8V | 171Ω |

($R_{12} = 153\Omega$)

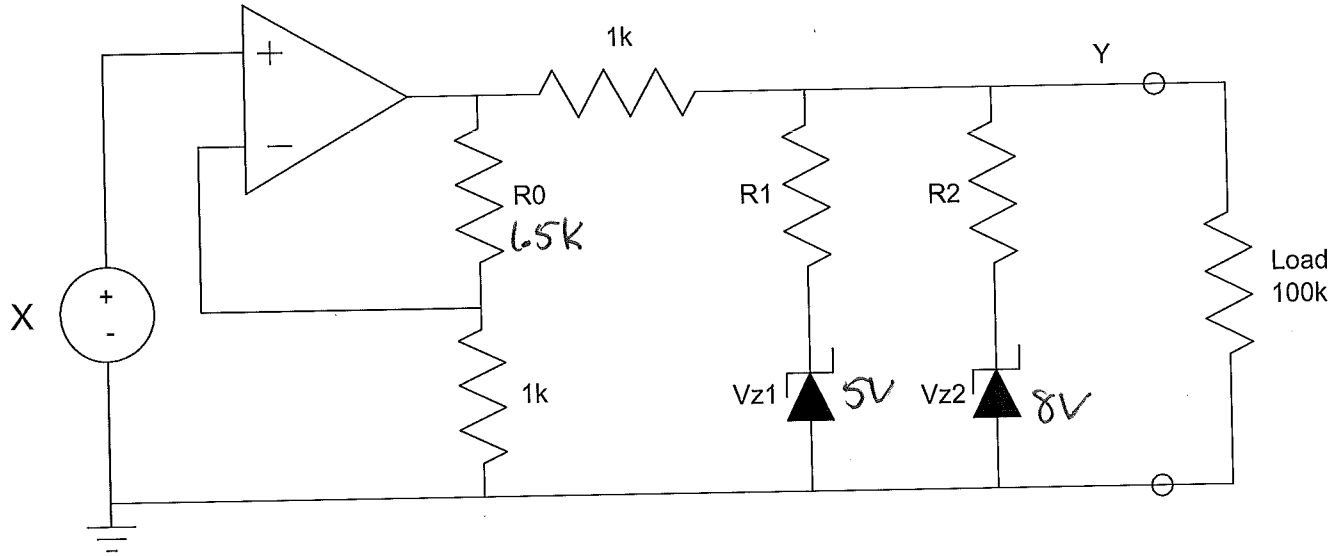


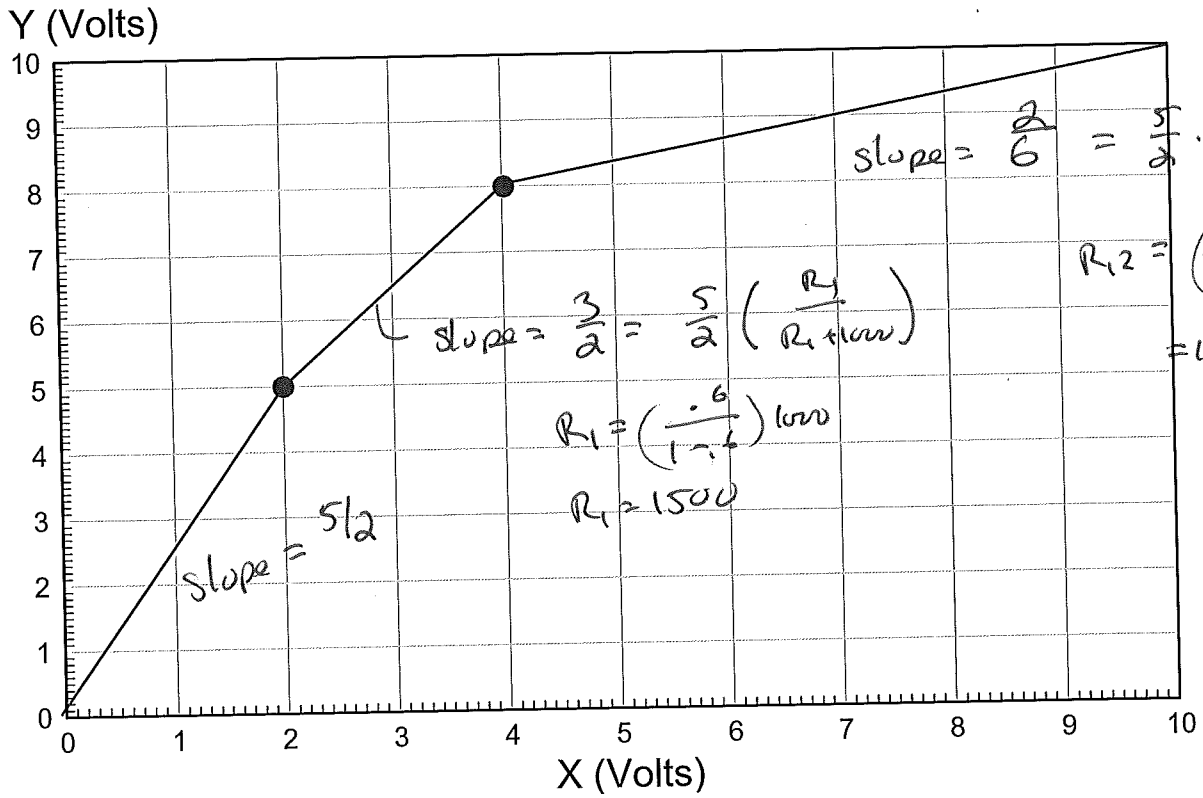

5) Design a clipper circuit so that

- Vout = Vin when -6V < Vin < +6V
- Vout clips at -6V when Vin < -6V
- Vout clips at +6V when Vin > +6V

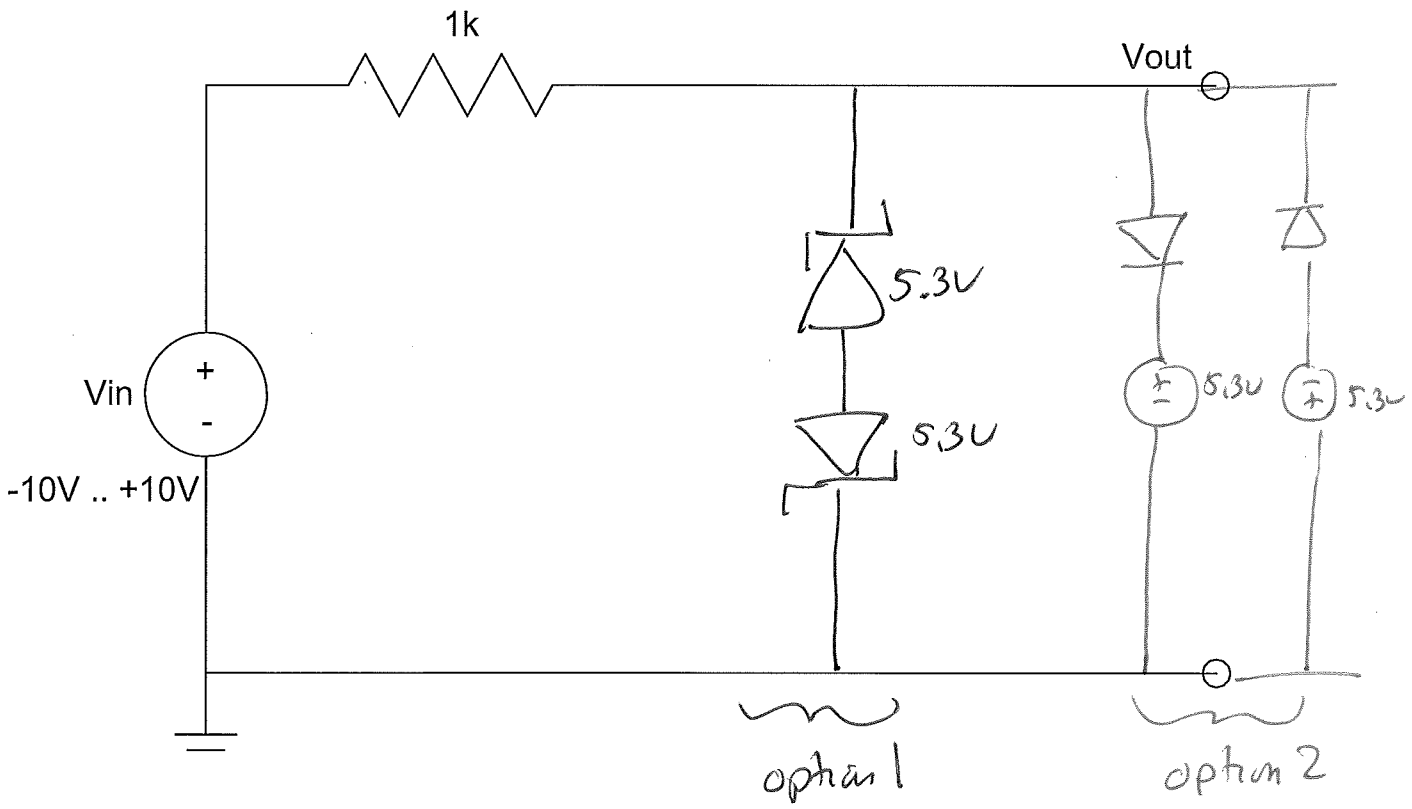

BONUS! One of the largest wind turbines in production today is a Siemens SWT-2.5-120 wind turbine, which

- Is 80m tall
- Has blades which are 120m in diameter (larger than a football field), and
- Produces 2.5MW of electricity when the wind is blowing 5m/s or more (which is pretty common in North Dakota).

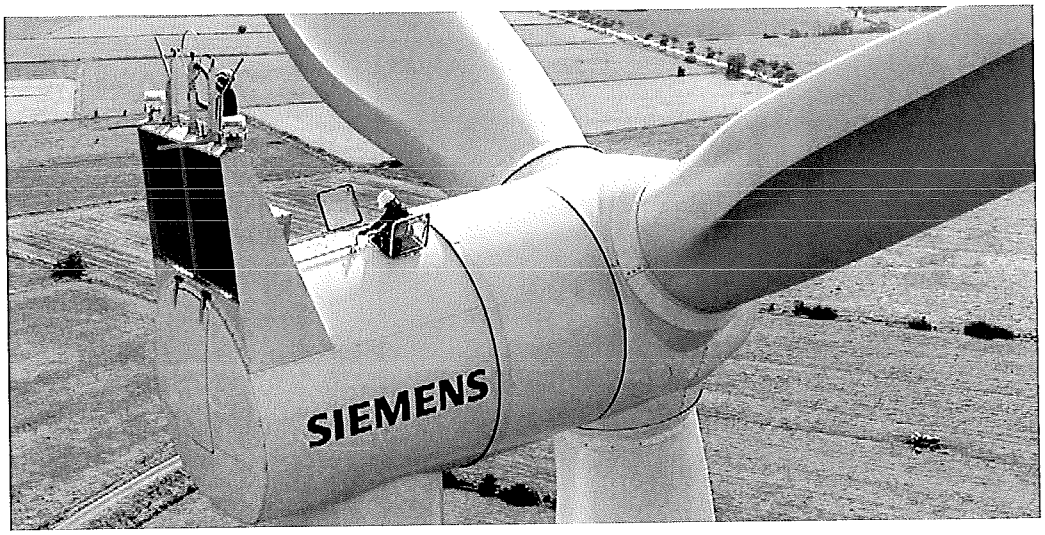


How many kWh can this wind turbine produce in a single year?

(2500 kW)(24h/day)(365 day/y) = 21,900,000 kWh

How many pounds of coal will this wind turbine offset? (note: one pound of coal produces approximately 1kWh of electricity).

21,900,000 lb coal

(per wind turbine)