ECE 320 - Quiz #7. Name _____

SCR, Op-Amp Circuits, March 1, 2018

1) For the following AC to DC converter (equal to an SCR with a firing angle of 0 degrees), determine the voltages at V1 and V2.

note: The DC voltage for the SCR circuit below is:

$$V_{avg} \approx \left(\frac{1+\cos\phi}{\pi}\right) \cdot V_p$$

V1		V2	
V1 (DC)	V1pp (AC)	V2 (DC)	V2pp (AC)
24.57V	$39.3V_{pp}$	24.57V	$4.667V_{pp}$

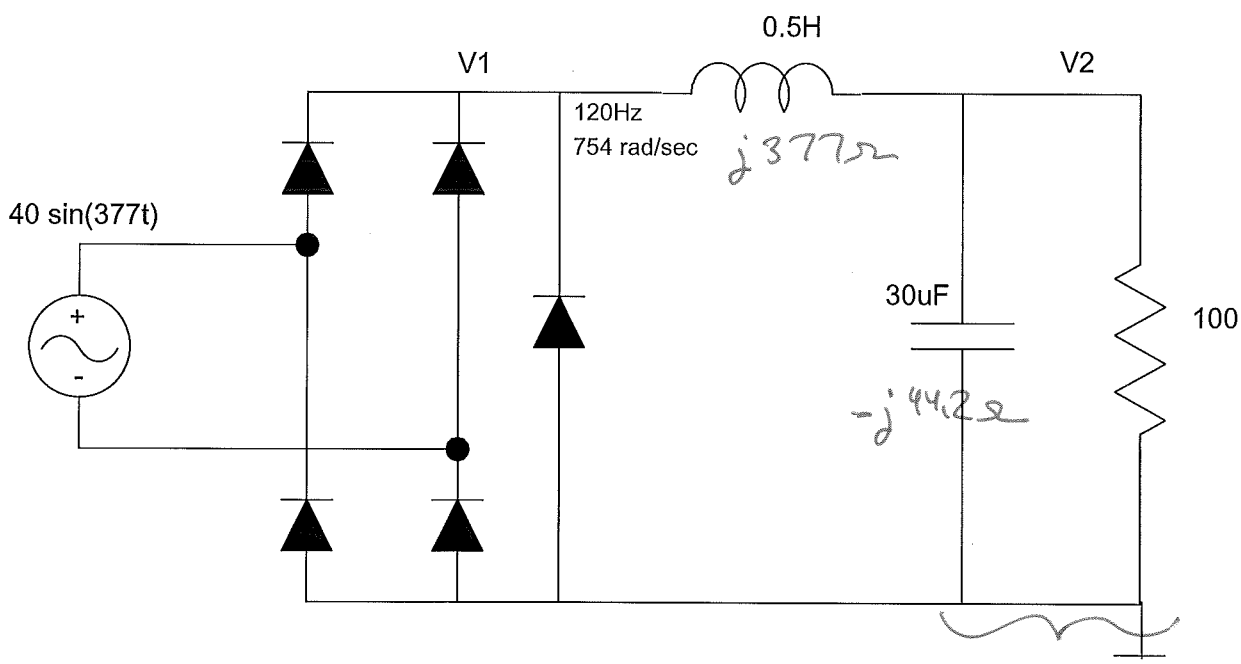

$V_p = 40 - 1.4 = 38.6V$

$DC = \frac{1+1}{\pi} \cdot 38.6$

$DC = \frac{2}{\pi} \cdot 38.6V$

$DC = 24.57V$

$V_{1\,pp} = 38.6 + .7 \quad 16.34 - j36.97$

$= 39.3V_{pp}$

$y = \left(\frac{(16.34 - j36.97)}{(16.34 - j36.97) + (j377)}\right) \cdot 39.3V_{pp}$

$y = 4.667V_{pp}$

2) Assume the SCR's have a firing angle of 70 degrees. Determine the voltages at V1 and V2.

note: The DC voltage for the SCR circuit below is:

$$V_{avg} \approx \left(\frac{1+\cos\phi}{\pi}\right) \cdot V_p$$

V1		V2	
V1 (DC)	V1pp (AC)	V2 (DC)	V2pp (AC)
16.49V	39.3Vpp	16.49V	4.667Vpp
	Same as problem #1		Same as problem #1

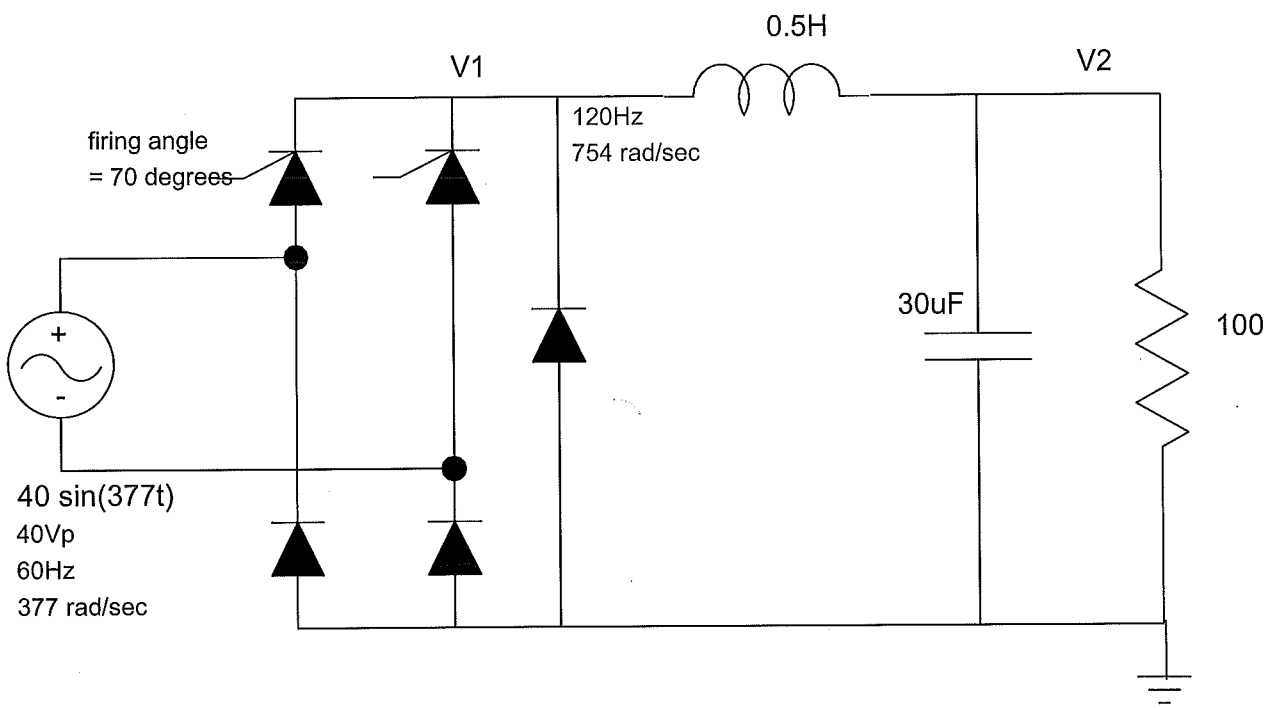

$$DC = \left(\frac{1+\cos(70^\circ)}{\pi\ 2}\right) \cdot 38.6V$$

$$= 16.49V$$

3) Determine the firing angle and L and C so that the following circuit has

- A DC voltage at V2 of 20V
- An AC voltage at V2 of 2Vpp when C = 0
- An AC voltage at V2 of 1Vpp when C > 0

Note: The DC voltage for the SCR circuit below is:

$$V_{avg} \approx \left(\frac{1+\cos\phi}{\pi}\right) \cdot V_p$$

Firing Angle DC voltage = 20.0V	L Ripple at V2 = 2Vpp when C = 0	C Ripple at V2 = 1Vpp
54.6°	2.6H	26.5uF

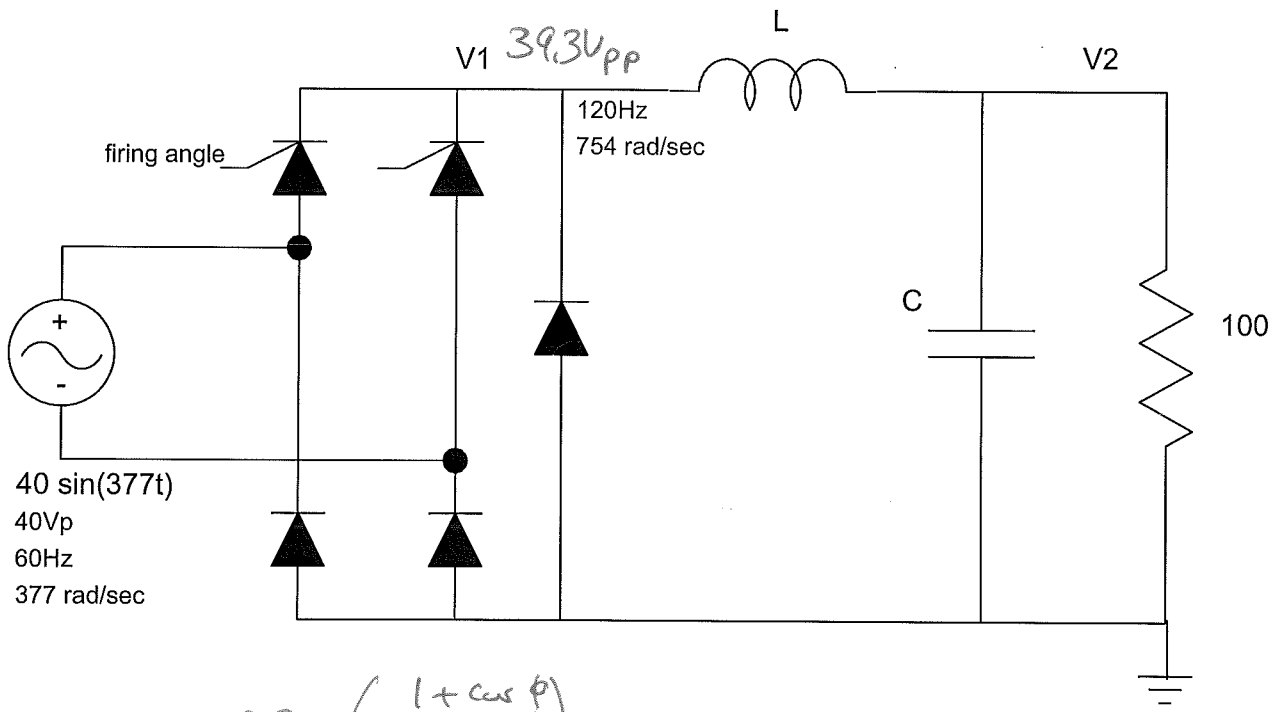

$$20 = 39.8\left(\frac{1+\cos\phi}{\pi}\right)$$

$$\phi = 54.6°$$

$$\frac{1}{\omega C} = \frac{1}{2} \cdot R$$

$$\frac{1}{\omega C} = 50\Omega$$

$$C = 26.5\mu F$$

$$\omega L = \left(\frac{39.3V_{pp}}{2V_{pp}}\right) \cdot 100$$

$$\omega L = 1965\Omega$$

$$L = 2.6H$$

4) Write the voltage node equations for the following op-amp circuit.

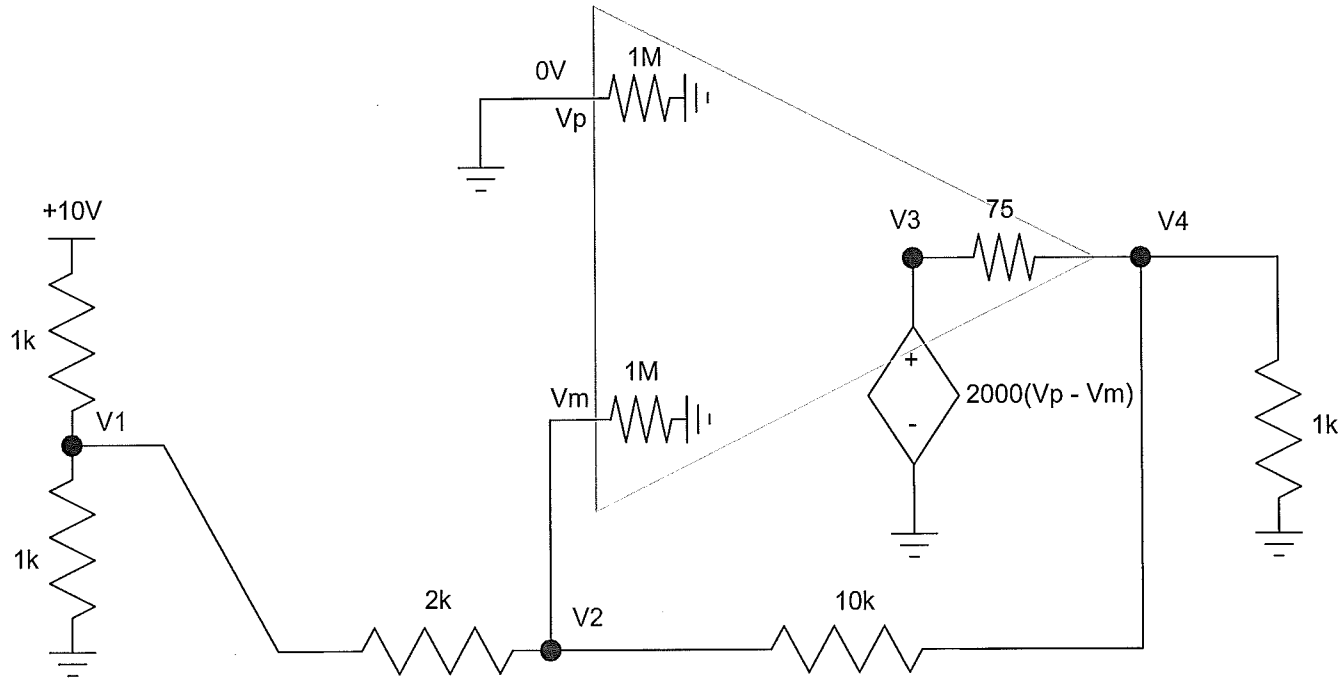

$\frac{V_1}{1k} + \frac{V_1 - 10}{1k} + \frac{V_1 - V_2}{2k} = 0$
$\frac{V_2}{1m} + \frac{V_2 - V_1}{2k} + \frac{V_2 - V_4}{10k} = 0$
$\frac{V_4 - V_3}{75} + \frac{V_4}{1k} + \frac{V_4 - V_2}{10k} = 0$
$V_3 = 2000(0 - V_2)$

5) Assume an ideal op-amp. Write the voltage node equations for the following circuit:

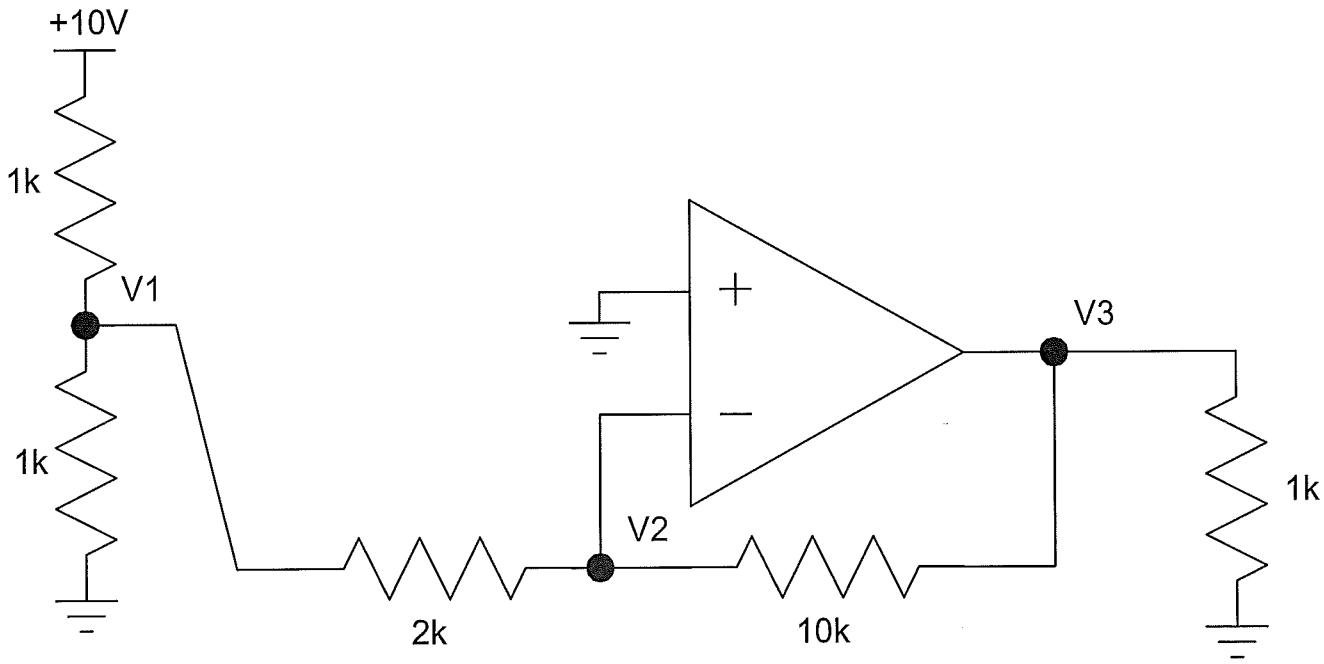

$V_2 = 0$
$\frac{V_1}{1k} + \frac{V_1 - 10}{10} + \frac{V_1 - V_2}{2k} = 0$
$\frac{V_2 - V_1}{2k} + \frac{V_2 - V_3}{10k} = 0$

Bonus: What country leads the world in solar energy generation?

China