ECE 320 - Quiz #8. Name _____

Comparitors, Schmitt Triggers, Boolean Logic, DTL Logic. March 9, 2018

Comparitor

1) Find the resistor values so that
   - I2 = 100mA when R > 1500 Ohms
   - R2 = 0mA when R < 1500 Ohms

$\beta = 100$

Vp & Vm	R1	R2
show connections and voltages on diagram	4.3k Ω	68 Ω

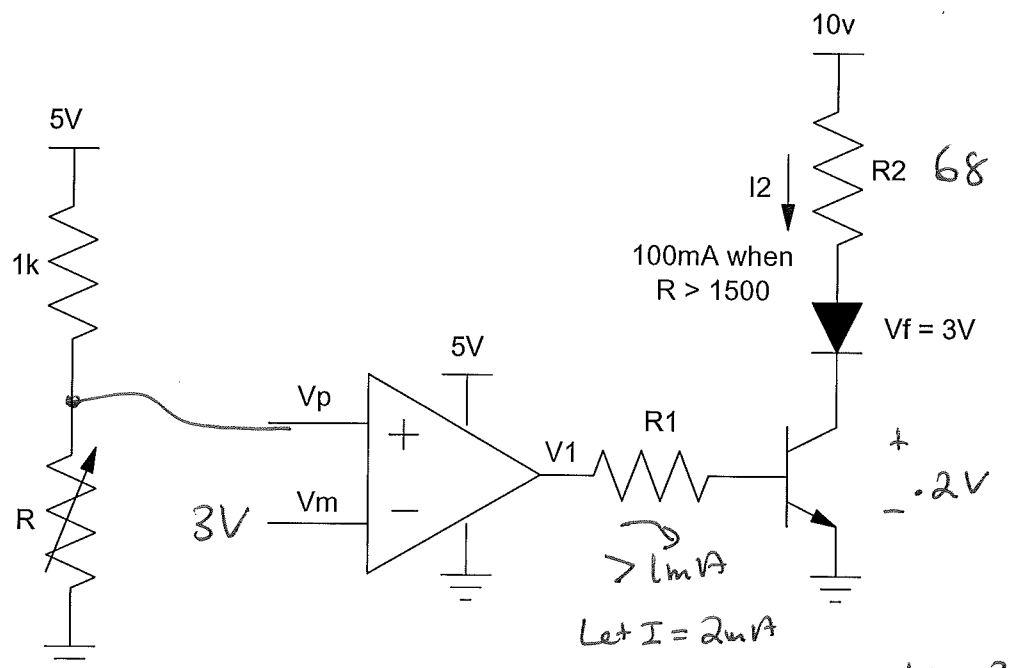

$$V = \left(\frac{1500}{1500+1000}\right) 5V = 3V$$

$$R_2 = \frac{10 - 3 - .2}{.1A}$$

$$R_2 = 68\Omega$$

$$R_1 = \frac{5 - .7}{1mA} = 4.3k$$

2) Design a Schmitt Trigger so that the output is

- 0V when R < 1000 Ohms
- 5V when R > 1500 Ohms
- No change for 1000 < R < 1500 Ohms

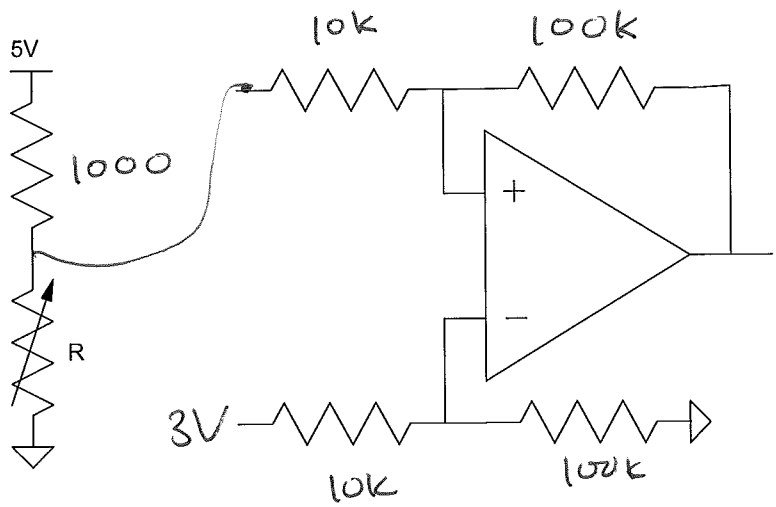

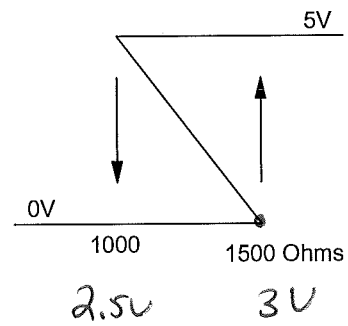

$$\text{gain} = \frac{5-0}{3-2.5} = 10$$

3) Determine the max-function representation for Y(A,B,C,D) (i.e. circle the ones)

AB \ CD	00	01	11	10
00	0	0	1	1
01	0	0	1	0
11	x	x	x	x
10	1	1	x	x

$$y = A + CD + \overline{B}C$$

4) Determine the voltages for the following DTL AND gate. Assume

- $\beta = 100$
- when on
- when saturated

Va	Vb	Vc	Vd
1.4V	.2V	.9V	4.83V

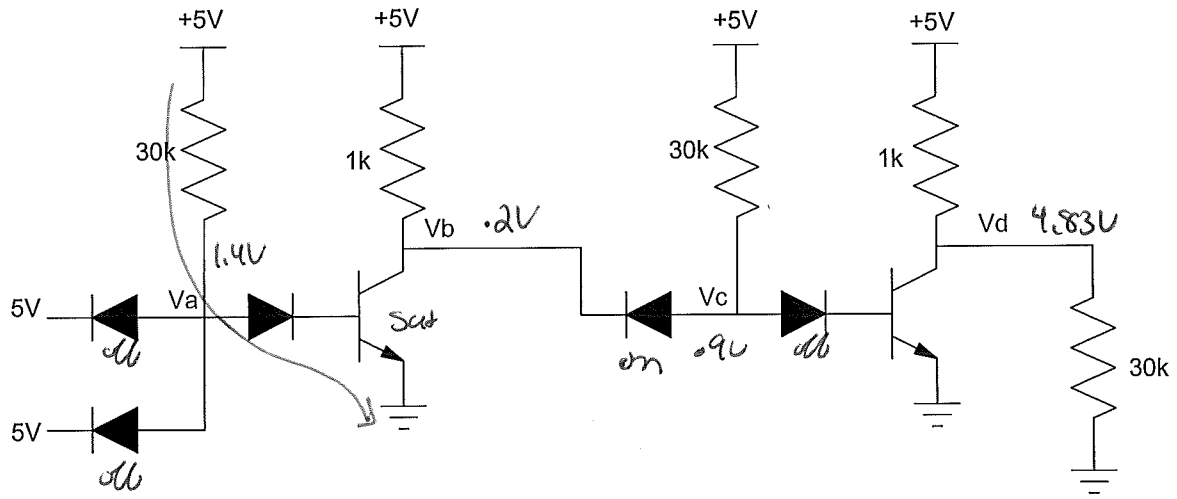

5) Determine the voltages for the following DTL AND gate. Assume

- $\beta = 100$
- $V_{be} = 0.7V$ when on
- $V_{ce} = 0.2V$ when saturated

Va	Vb	Vc	Vd
.7V	5V	1.4V	.2V

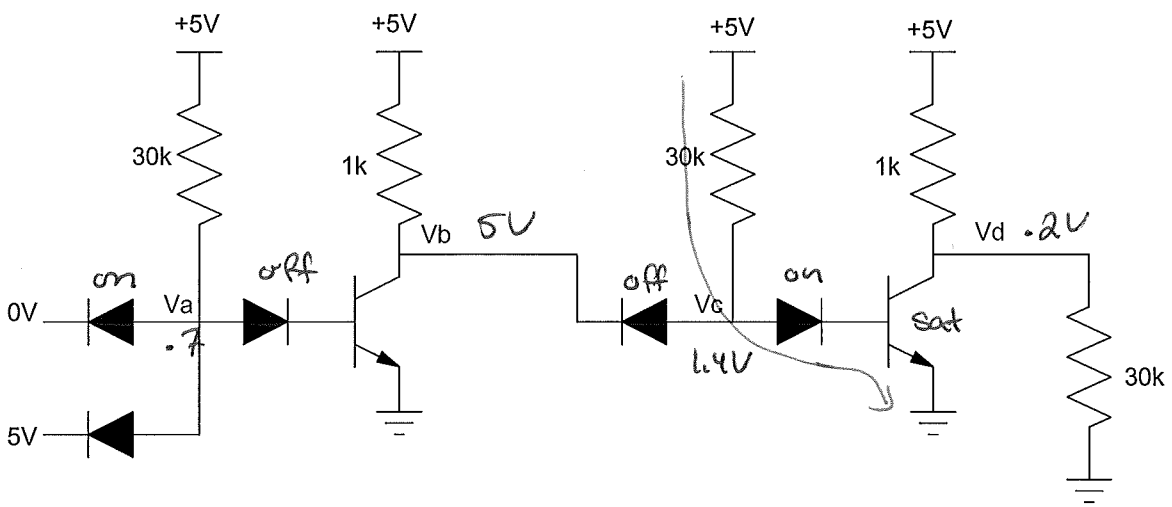

Bonus! One 2.5MW wind turbine can produce enough energy to offset 21.9 million pounds of coal each year of operation. How many pounds of uranium is required to offset 21.9 million pounds of coal?

1 million : 1

uranium : coal

≈ 21.9 pounds