ECE 320 - Solution to Homework #3

Diode VI Characteristics, Ideal Diode, LEDs. Due Monday, January 29th, 2018

Diode VI Characteristics

Assume the VI characteristics for a diode are:

$$V_d = 0.052 \cdot \ln(10^8 I_d + 1) \qquad\qquad I_d = 10^{-8}\left(\exp\left(\frac{V_d}{0.052}\right) - 1\right)$$

1) Write the voltage node equations for the following circuit using the nonlinear diode equations (above). Solve these nonlinear equations to find Vd and Id.

$$I_d = 10^{-8}\left(\exp\left(\frac{V_d}{0.052}\right) - 1\right)$$

$$V_d = 10 - 1000 I_d$$

In Matlab, create a cost function where

- You pass your guess for Vd
- From the diode equation, it computes the current
- The squared error of equation #2 is then returned

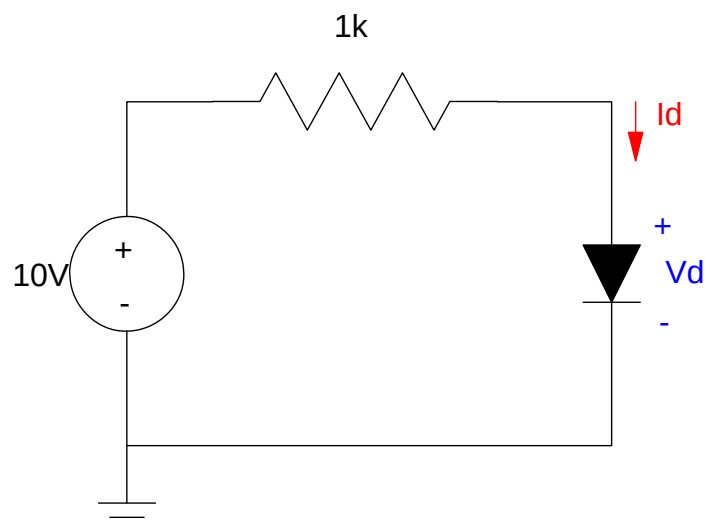


```
function [ J ] = cost( z )
 Vd = z(1);
 Id = 1e-8 * (exp(Vd/0.052) - 1);

 e = 10 - Vd - 1000*Id;

 J = e ^2;

end
```

Solve using *fminsearch()*

```
>> Vd = fminsearch('cost',0.7)

    0.7146

>> cost(Vd)

  2.6383e-006                    almost zero error, so Vd is correct


>> Id = 1e-8 * (exp(Vd/0.052) - 1)

    0.0093
```

ans: Vd = 0.7146V, Id = 9.3mA

2) Draw the load-line for this diode circuit. Solve for Vd and Id using load-line analysis.

```
>> Id = [0:0.001:1]' * 0.01;
>> Vd1 = 10 - 1000*Id;
>> Vd2 = 0.052*log(1e8 * Id + 1);
>> plot(Vd1,Id*1000,Vd2,Id*1000);
>> xlabel('Vd');
>> ylabel('Id');
```

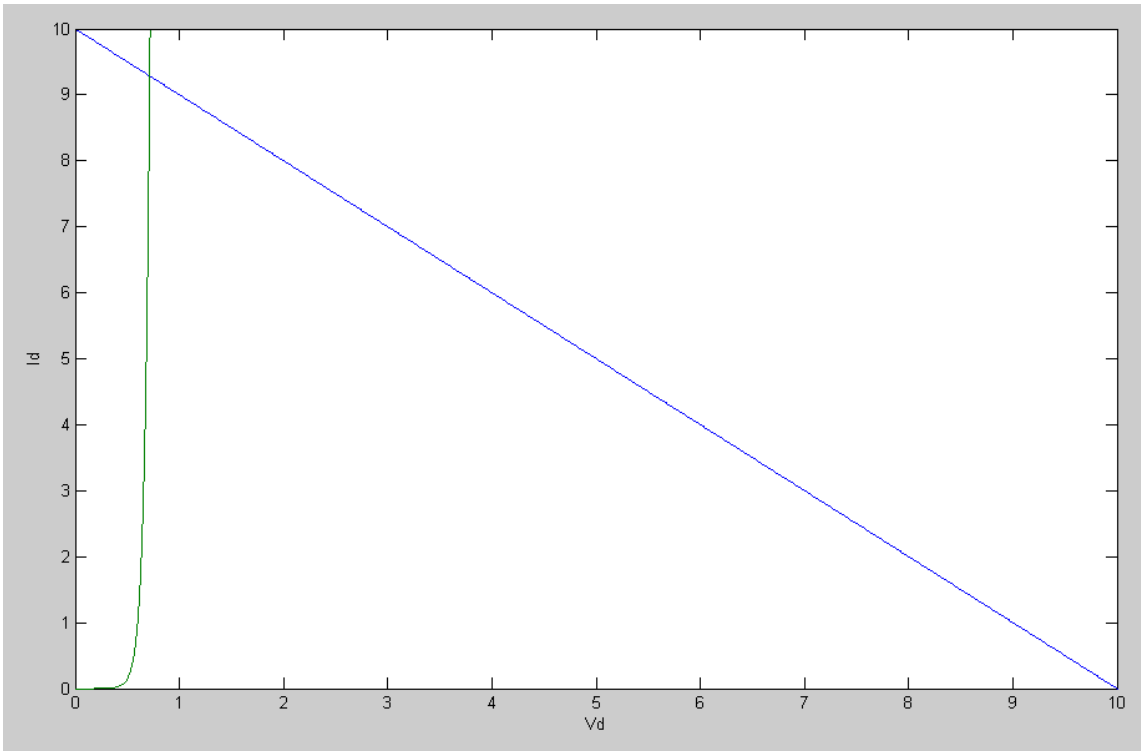

Same answer as before:

ans: Vd = 0.7146V, Id = 9.3mA

3) Assume an ideal silicon diode. Compute Vd and Id.

Assume the diode is on:

$$V_d = 0.7V$$

$$I_d = \left(\frac{10-0.7}{1k}\right) = 9.3mA$$

4) Check your answer in PartSim using a 1N4007 Fairchild diode.

- (Vendor Parts - Fairchild - Rectifier Diode - 1N4007)

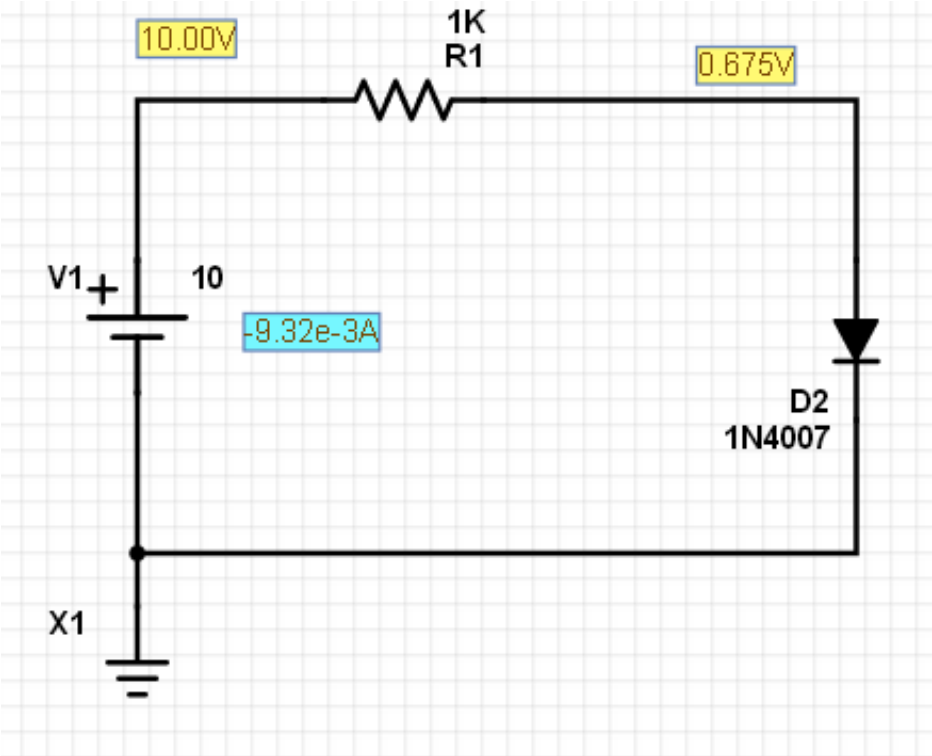

	Vd	Id
Nonlinear Model (Problem 1)	0.7146 V	9.285 mA
Load Line (Problem 2)	0.7146 V	9.285 mA
Ideal Silicon Diode (Problem 3)	0.7 V	9.3 mA
PartSim (Problem 4)	0.675 V	9.32 mA
Lab Results (not asked for)	0.6566 V	9.343 mA

Problem 5-8) For the following diode circuit with Vin = +5V

5) Write the voltage node equations using the nonlinear model for the diodes.

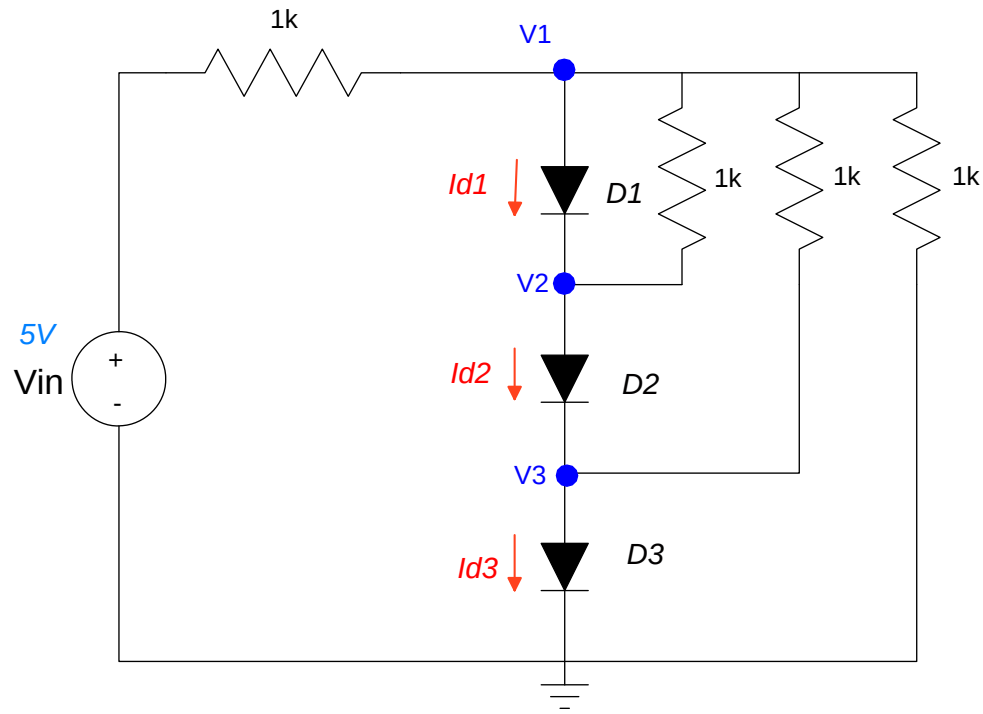

$$I_{d1} = 10^{-8}\left(\exp\left(\frac{V_1 - V_2}{0.052}\right) - 1\right)$$

$$I_{d2} = 10^{-8}\left(\exp\left(\frac{V_2 - V_3}{0.052}\right) - 1\right)$$

$$I_{d3} = 10^{-8}\left(\exp\left(\frac{V_3 - 0}{0.052}\right) - 1\right)$$

$$\left(\frac{V_1 - 10}{1k}\right) + I_{d1} + \left(\frac{V_1 - V_2}{1k}\right) + \left(\frac{V_1 - V_3}{1k}\right) + \left(\frac{V_1}{1k}\right) = 0$$

$$-I_{d1} + I_{d2} + \left(\frac{V_2 - V_1}{1k}\right) = 0$$

$$-I_{d2} + I_{d3} + \left(\frac{V_3 - V_1}{1k}\right) = 0$$

6) Solve for the node voltages using Matlab (or similar program)

Write an M-file which

- is passed V1, V2, V3
- Computes the current (Id1, Id2, Id3),
- Computes the error in the current equations (current should sum to zero), and
- Returns the sum squared error of the current

\

```
function [ J ] = cost( z )
 V1 = z(1);
 V2 = z(2);
 V3 = z(3);

 Id1 = 1e-8 * (exp((V1-V2)/0.052) - 1);
 Id2 = 1e-8 * (exp((V2-V3)/0.052) - 1);
 Id3 = 1e-8 * (exp(V3/0.052) - 1);

 e1 = (V1-10)/1000 + Id1 + (V1-V2)/1000 + (V1-V3)/1000 + V1/1000;
 e2 = -Id1 + Id2 + (V2-V1)/1000;
 e3 = -Id2 + Id3 + (V3-V1)/1000;

 J = e1 ^2  + e2^2 + e3^2;

end
```

use *fminsearch()* to solve 3 equations for 3 unknowns:

```
>> V = fminsearch('cost',[2.1,1.4,0.7])

    2.0385    1.3690    0.6912

>> cost(V)


  1.6056e-011
```

7) Assume ideal silicon diodes. Solve for V1, V2, V3

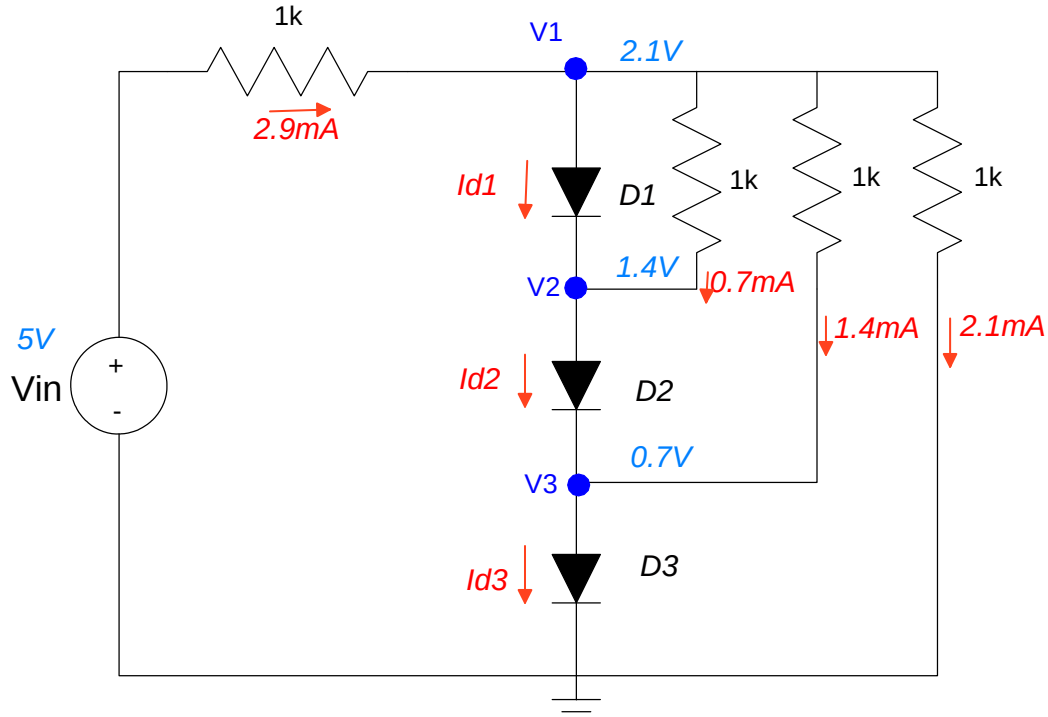

Take 1:

Assume

- D1 = On
- D2 = On
- D3 = On

Then

- V3 = 0.7V
- V2 = 1.4V
- V3 = 2.1V

Check: The currents have to balance

$$2.9mA = I_{d1} + 0.7mA + 1.4mA + 2.1mA$$

$$I_{d1} = -0.6mA$$

The current can't be negative - meaning my assumption was wrong.

Take 2

Assume

- D1 = Off
- D2 = On
- D3 = On

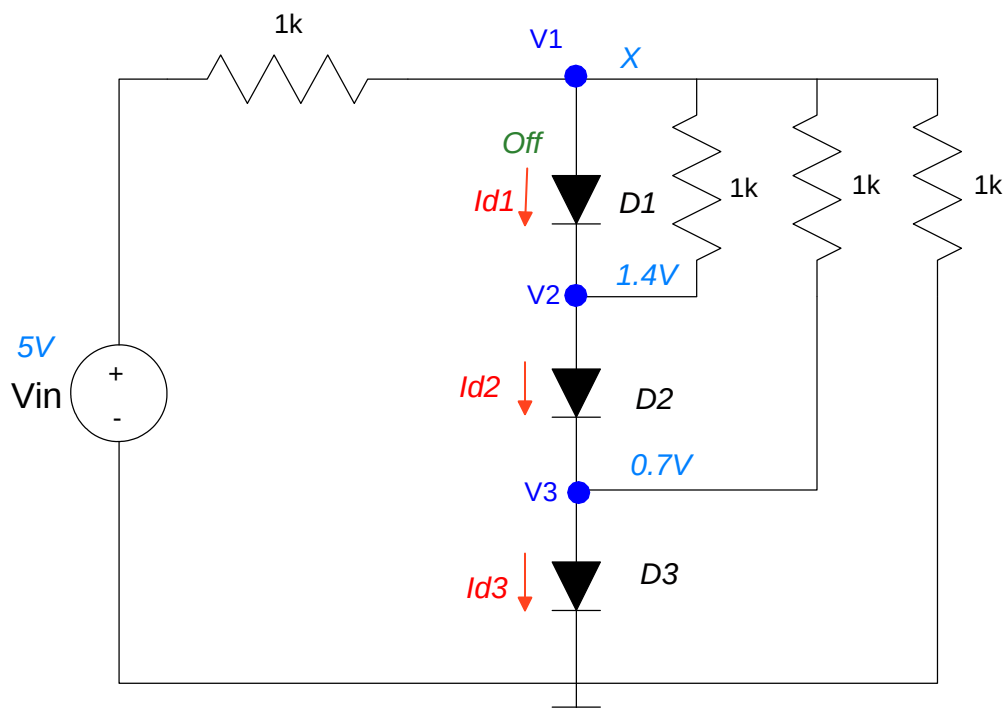

Then, at node X, sum the currents to zero

$$\left(\frac{X-5}{1k}\right)+0+\left(\frac{X-1.4}{1k}\right)+\left(\frac{X-0.7}{1k}\right)+\left(\frac{X}{1k}\right)=0$$

$$X=1.775V$$

- **V3 = 0.7V**
- **V2 = 1.4V**
- **V1 = 1.775V**

8) Check your answers in PartSim (or similar program)

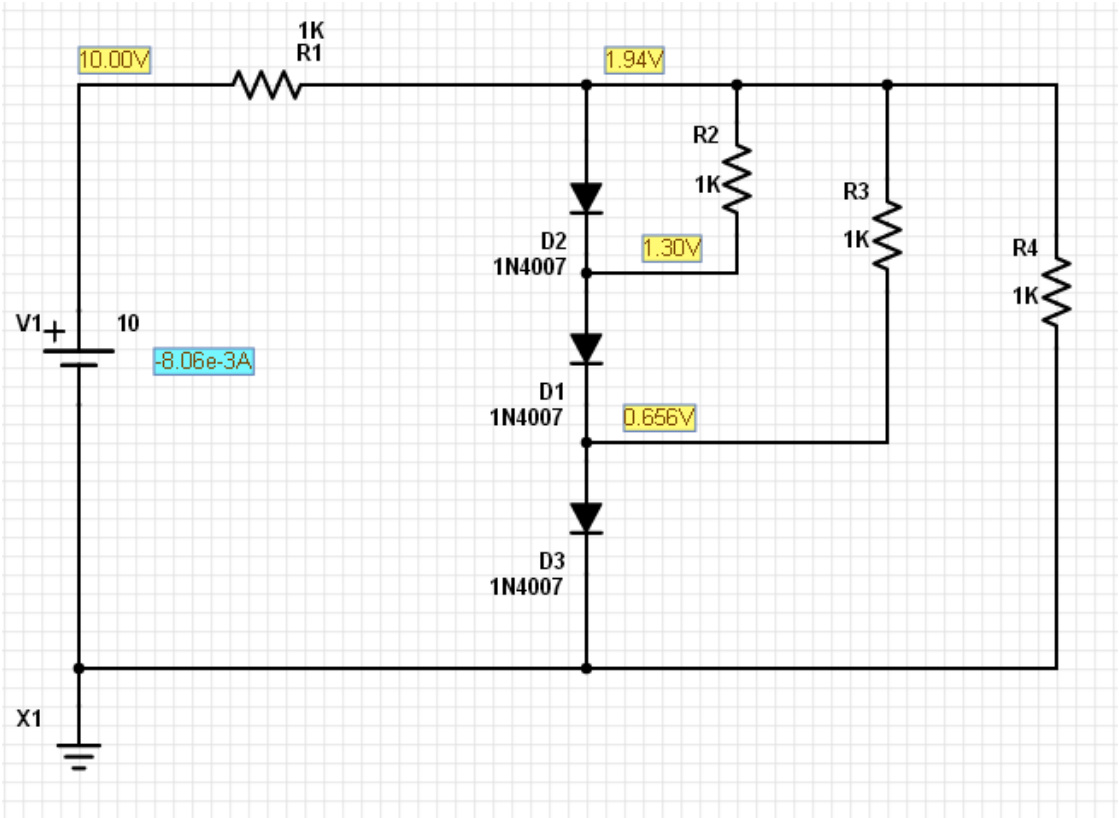

Lab:

9) Build this diode circuit below and check your calculations

	V1	V2	V3
Nonlinear Model Problem 6	2.04	1.37	0.69
Ideal Diode Problem 7	1.77	1.4	0.7
PartSim Problem 8	1.94	1.3	0.66
Lab Problem 9	1.69	1.19	0.62