ECE 320: Final - Part 1. Name _____

Semiconductors & Diodes - March 21, 2019

1a) Define the following terms:

p-type semiconductor

n-type semiconductor

Why does the resistance of silicon decrease as temperature increases?

2) The VI characteristics for an LED is shown below. Draw the load line for the following circuit and determine the operating point.

Load Line	Vd	Id
show on graph		

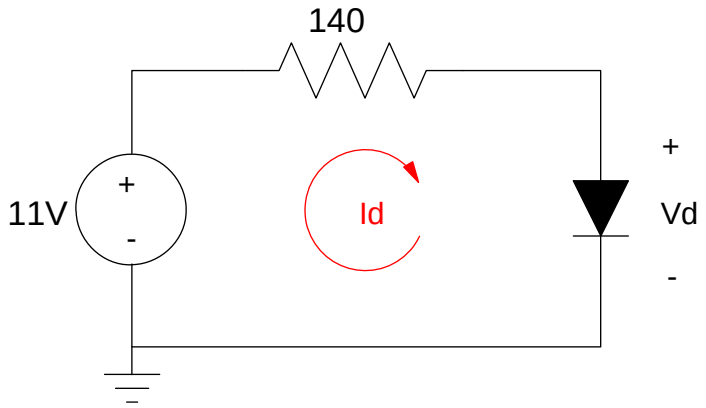

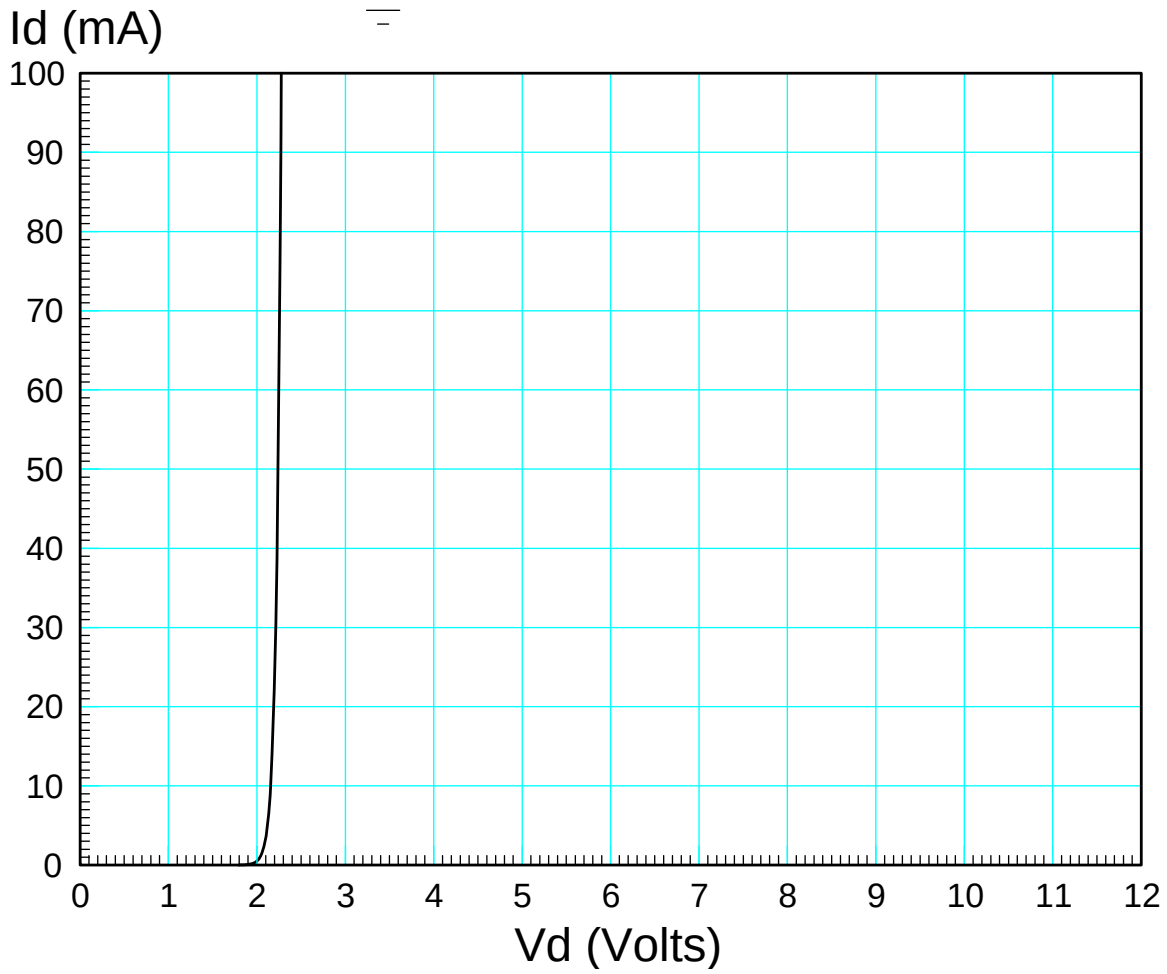

3) Assume ideal silicon diodes (Vf = 0.7V). Determine the currents, I1 - I4

I1	I2	I3	I4

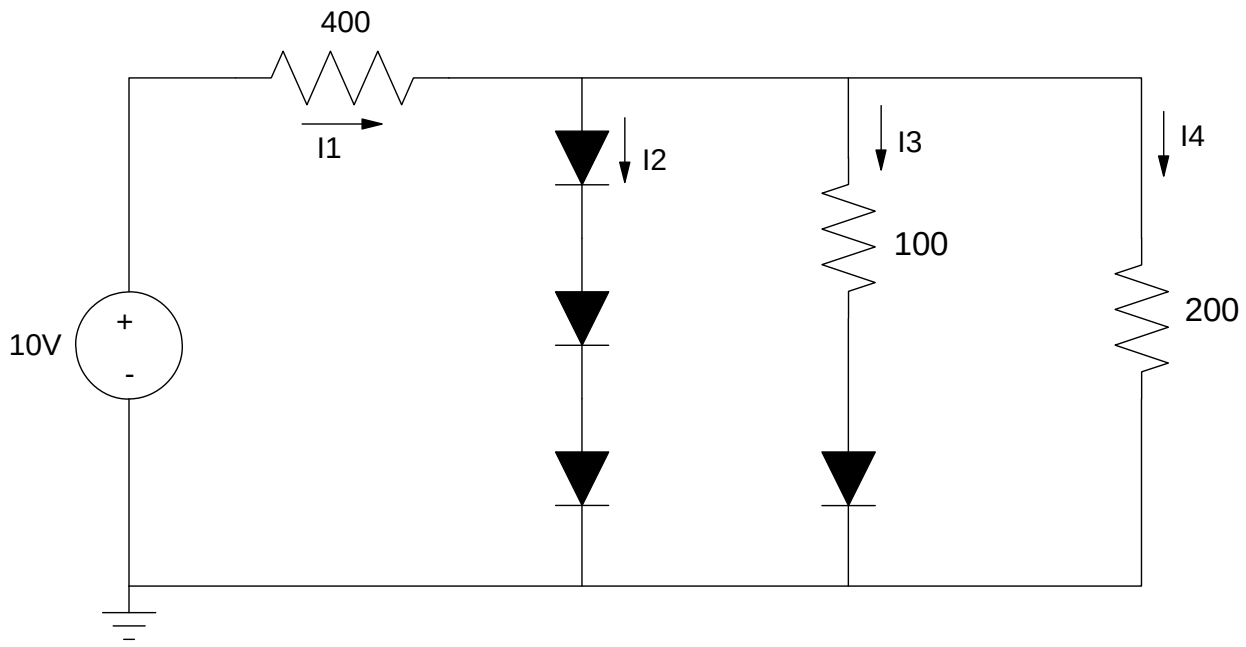

4) Assume ideal silicon diodes (Vf = 0.7V). Determine the currents, I1 - I4

I1	I2	I3	I4

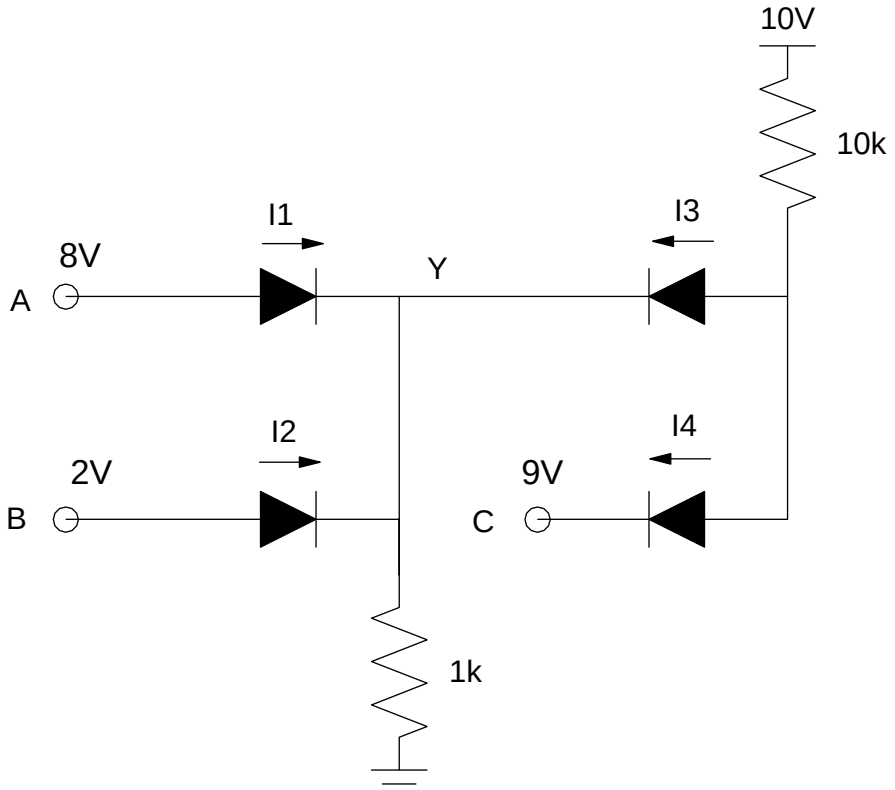

5) For the following AC to DC converter, determine the following

V1 (peak)	V1pp (AC)	V2 (DC)	V2pp (AC)

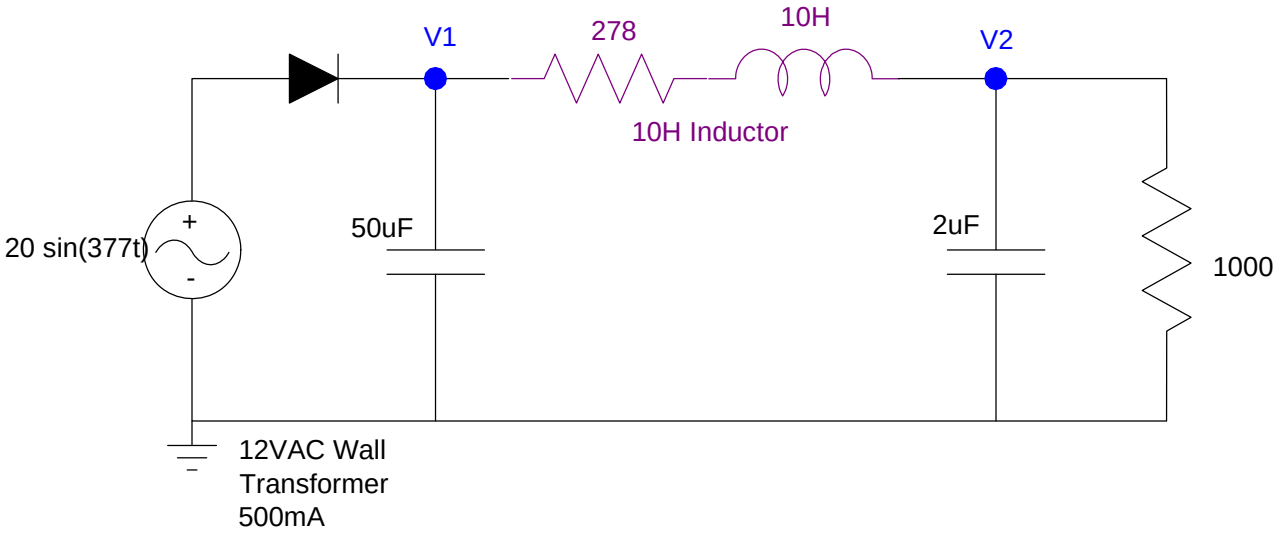

ECE 320: Final - Part 2. Name _____

BJT Transistors & MOSFET Circuits - March 22, 2019

1) The VI characteristics for an NPN transistor are shown below. Draw the load-line and mark the operating point for Vin = {0V, 5V, 10V}

Load Line	a) Vin = 0V	b) Vin = 5V	c) Vin = 10V
show on graph	show on graph	show on graph	show on graph

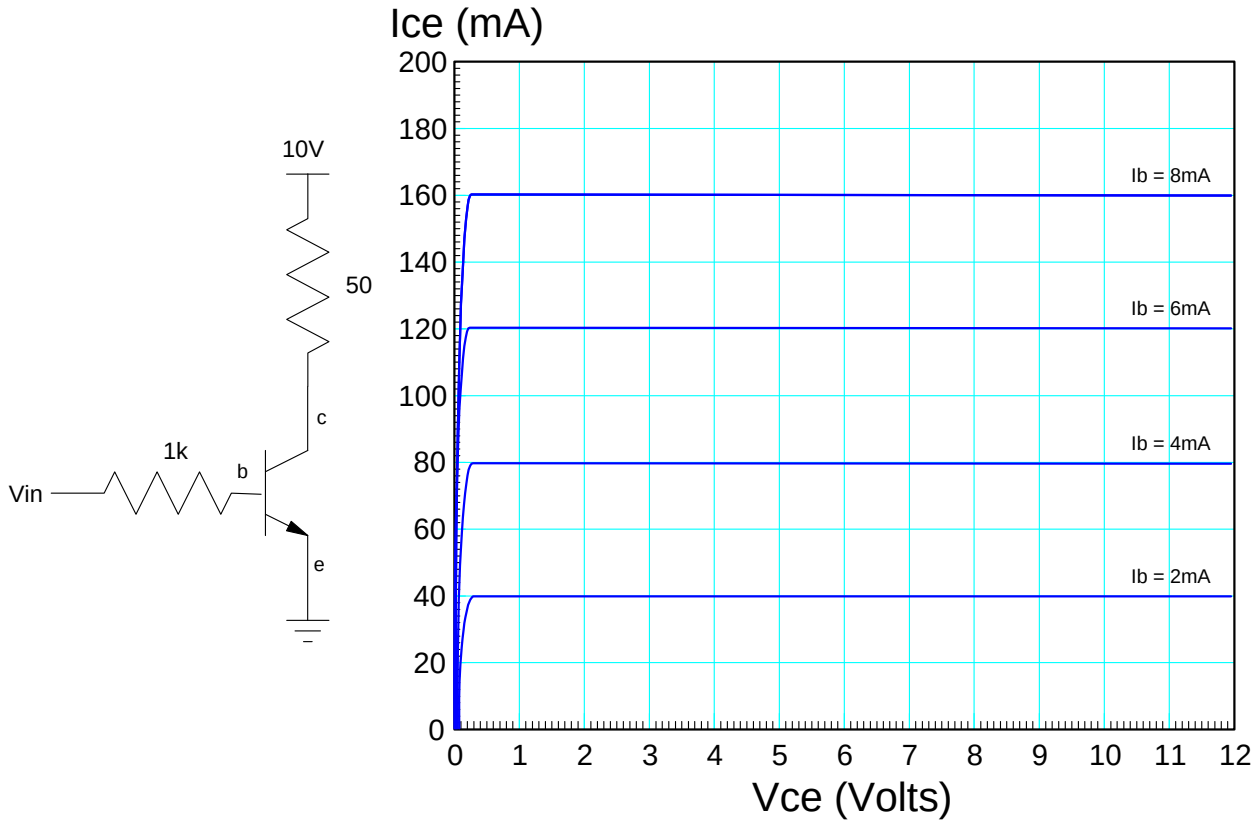

2) Transistor Switch: A circuit to allow a funciton generator to turn on and off an LED is shown below.

- Vin = 5V: LED is on (Ic = 100mA)
- Vin = 0V: LED is off (Ic = 0mA)

Find the range of Rb and Rc for this circuit to work as a switch. Assume

- Vin can only supply 10mA (or less)
- An ideal silicon transistor (Vf = 0.7V) with β=100
- The LED has a 3.0V drop when Id = 200mA

Smallest Value of Rb	Largest Value of Rb	Rc

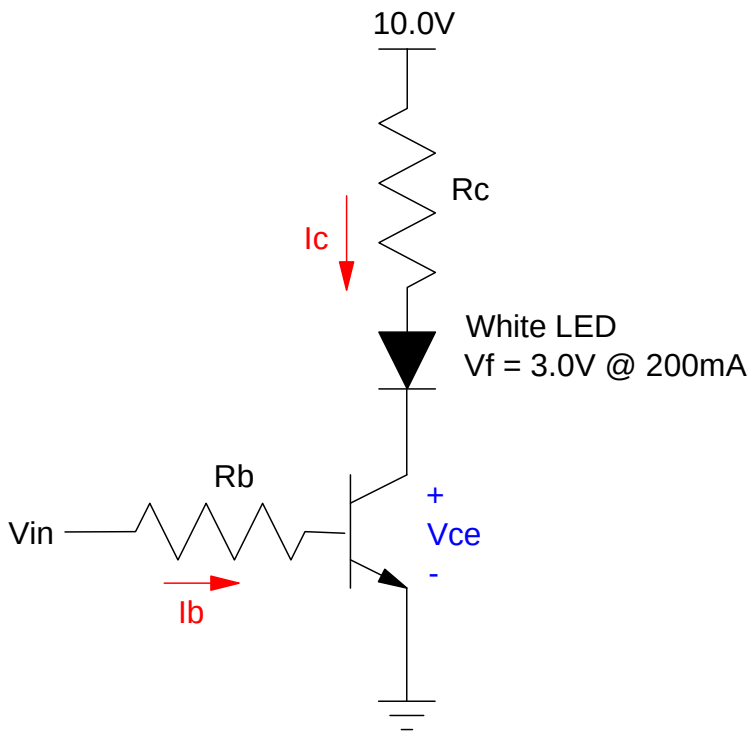

3) H-Bridge. Determine the currents and voltages for the following H-bridge. Assume ideal silicon transistors with $\beta = 100$

I1	I2	I3	V1	V2

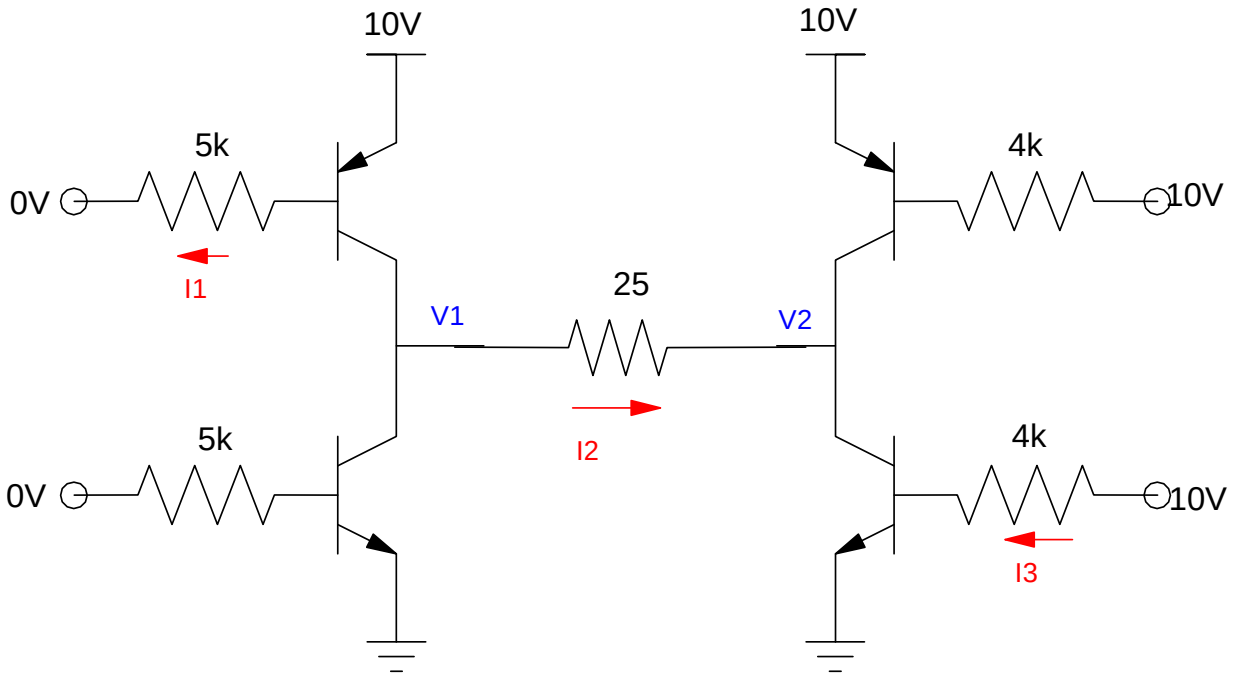

4) DTL Logic: Determine the voltages for the following DTL logic gate. Assume $\beta = 100$

V1	V2	V3	V4

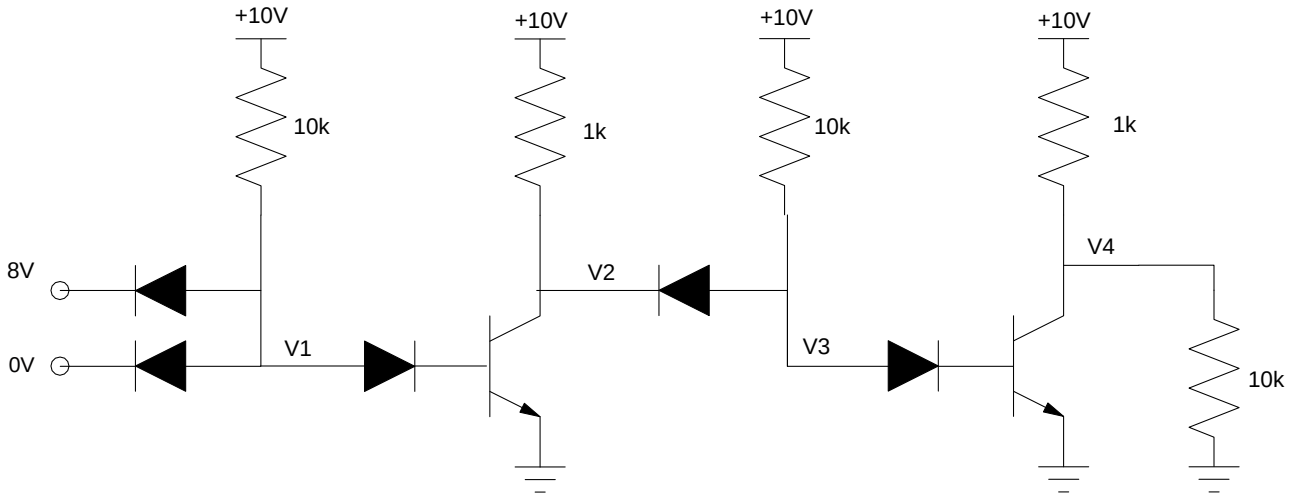

5) Design a Schmitt Trigger which outputs

- +10V when R > 7k Ohms
- 0V when R < 6k Ohms, and
- Is unchanged for 6k < R < 7k