ECE 320 - Homework #9

DTL, TTL Logic, MOSFETs. Due Monday, Marth 18th, 2019

Assume 3904 transistors:

- $\beta = 100$
- $V_{be} = 0.7V$
- $\min(V_{ce}) = 0.2V$

DTL Logic:

1) Determine the voltages and currents for the following DTL OR gate.

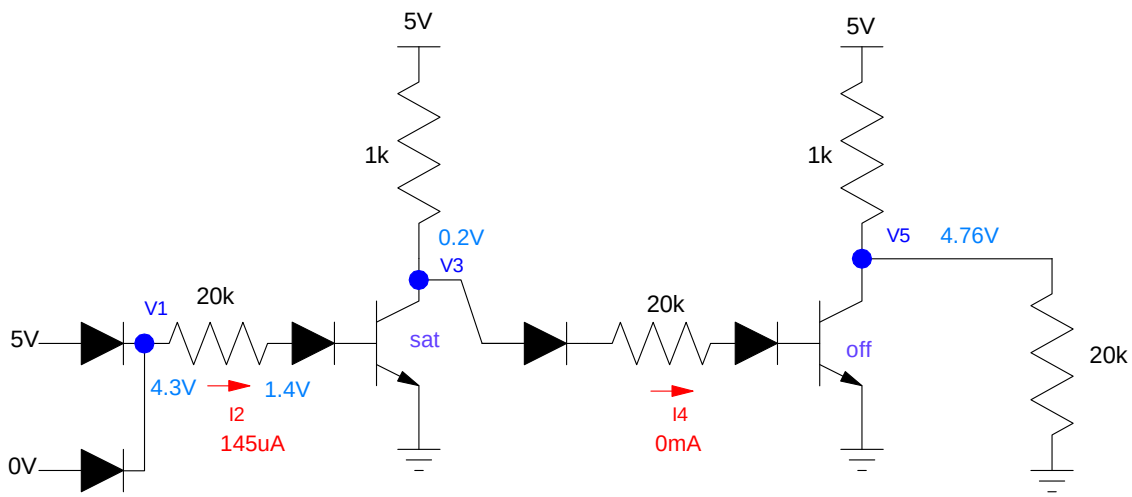

2) Check your answers in PartSim

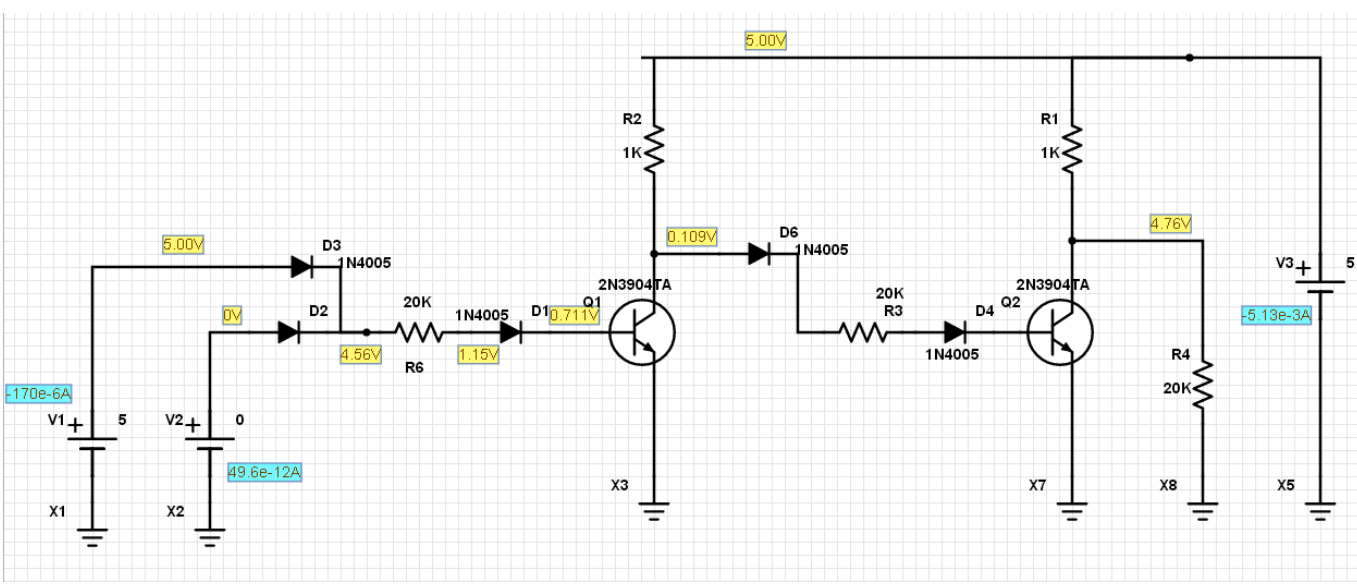

TTL Logic:

3) Determine the voltages and currents for the following TTL inverter

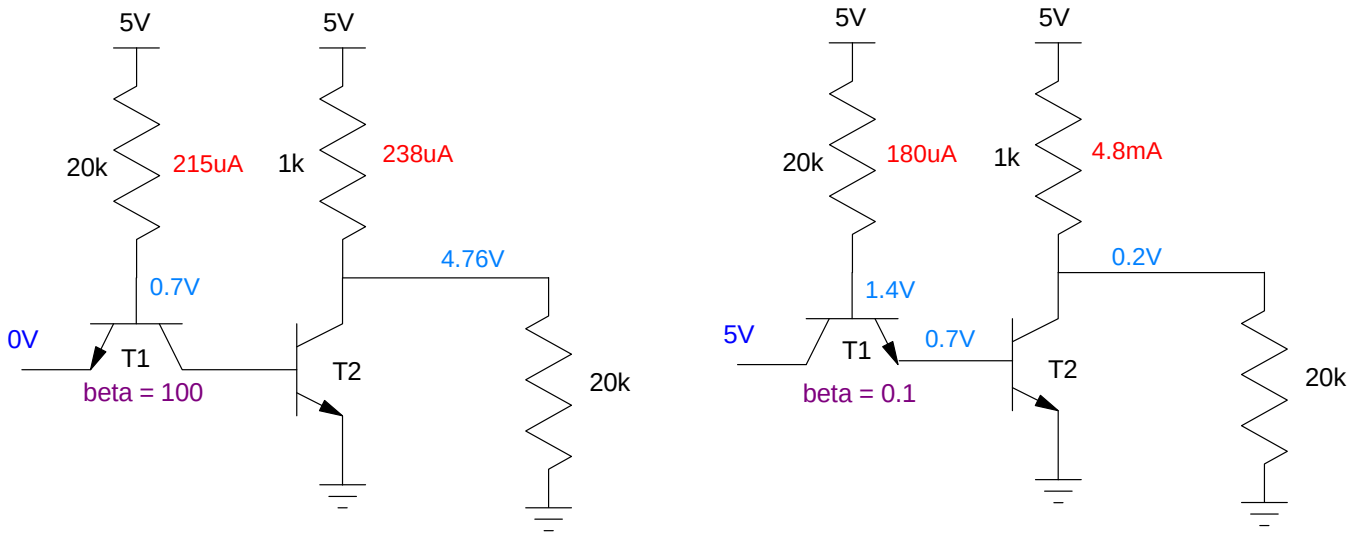

4) Check your answers in PartSim

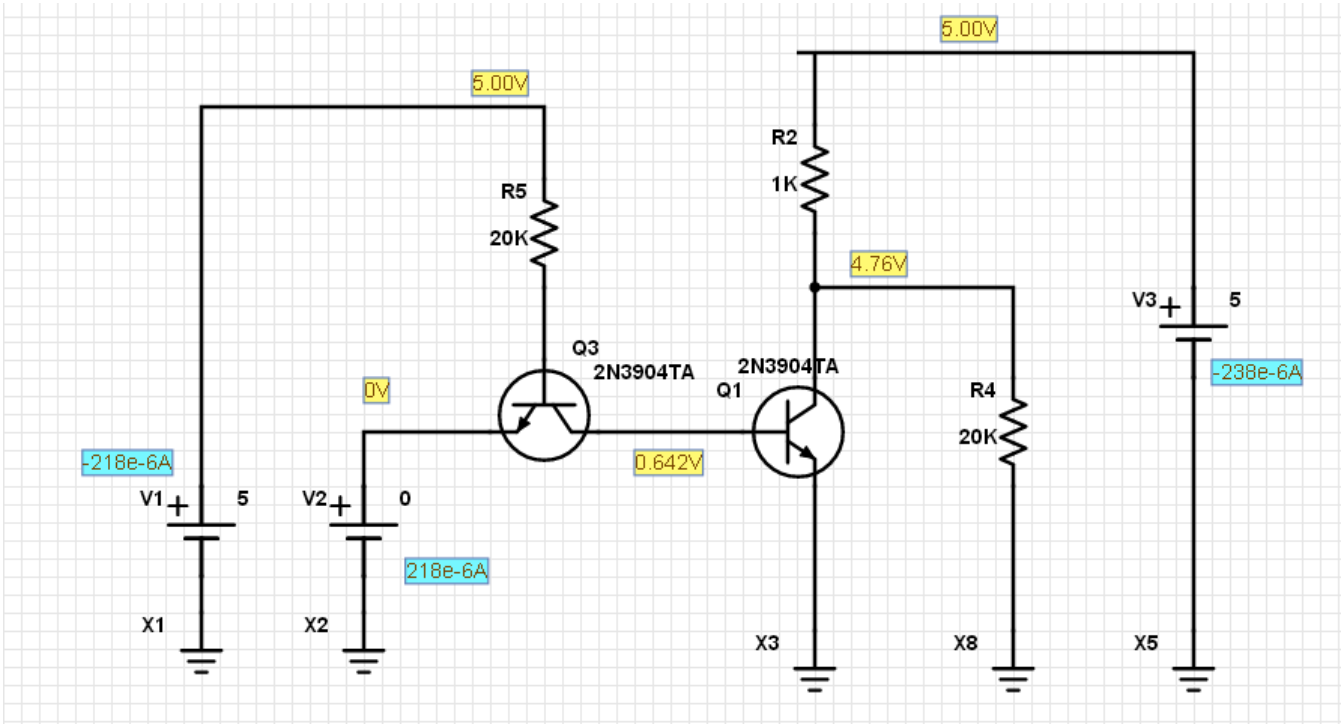

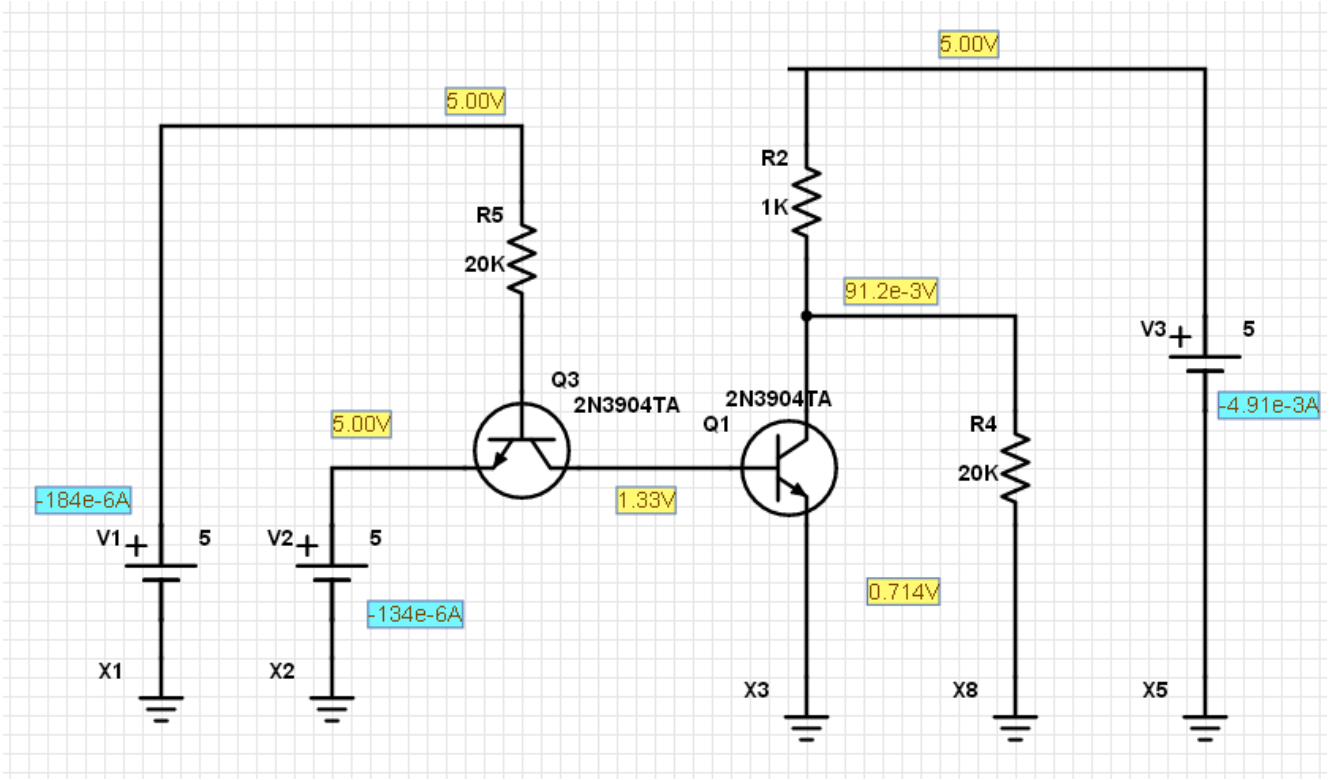
5.00V
5.00V
R2
1K
R5
20K
91.2e-3V
V3
5
Q3
2N3904TA
2N3904TA
Q1
-4.91e-3A
5.00V
R4
20K
-184e-6A
1.33V
V1
5
V2
5
0.714V
-134e-6A
X1
X2
X3
X8
X5

MOSFETs

5) Label the off / saturated / ohmic regions for the following MOSFET and determine the transconductance gain, kn

6a) Draw the load line for the circuit below on this MOSFET

6b) Assume the threshold votlage is Vgs = 2.0V. Determine the operating point when

- Vg = 0V Vds = 10V Ids = 0mA Off
- Vg = 4V Vds = 8.5V Ids = 20mA Saturated
- Vg = 7V Vds = 2.1V Ids = 92mA Ohmic