ECE 320 - Homework #1

EE 206 Review, Phasors. Due Monday, January 14, 2019

1. Voltage Nodes:

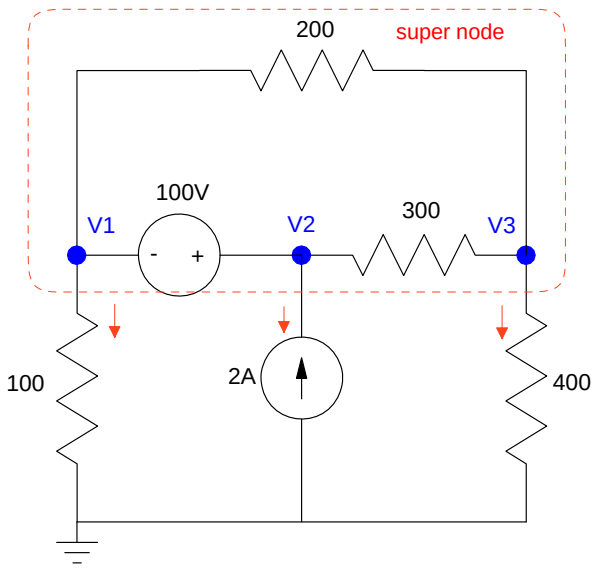

a) Write the voltage node equations for the following circuit

$$V_2 - V_1 = 100$$ *voltage source*

$$\left(\frac{V_3 - V_2}{300}\right) + \left(\frac{V_3 - V_1}{200}\right) + \left(\frac{V_3 - 0}{400}\right) = 0$$ *current from node V3 must sum to zero*

$$\left(\frac{V_1}{100}\right) - 2 + \left(\frac{V_3}{400}\right) = 0$$ *current from the supernode must sum to zero*

note: Other supernodes are also OK. As long as the supernode forms a closed region, the sum from that region must sum to zero.

b) Solve using Matlab (or similar program)

Group terms

$$V_2 - V_1 = 100$$

$$\left(\frac{-1}{200}\right)V_1 + \left(\frac{-1}{300}\right)V_2 + \left(\frac{1}{200} + \frac{1}{300} + \frac{1}{400}\right)V_3 = 0$$

$$\left(\frac{1}{100}\right)V_1 + \left(\frac{1}{400}\right)V_3 = 2$$

Place in matrix form

$$\begin{bmatrix} -1 & 1 & 0 \\ \left(\frac{-1}{200}\right) & \left(\frac{-1}{300}\right) & \left(\frac{1}{200} + \frac{1}{300} + \frac{1}{400}\right) \\ \left(\frac{1}{100}\right) & 0 & \left(\frac{1}{400}\right) \end{bmatrix} \begin{bmatrix} V_1 \\ V_2 \\ V_3 \end{bmatrix} = \begin{bmatrix} 100 \\ 0 \\ 2 \end{bmatrix}$$

Solve in Matlab (or similar program. I like SciLab: it's free. I like free.)

```
A = [-1, 1, 0 ; -1/200,-1/300,1/200+1/300+1/400 ; 1/100,0,1/400]

  - 1.       1.           0.
  - 0.005  - 0.0033333    0.0108333
    0.01     0.           0.0025

B = [100;0;2]

    100.
    0.
    2.

V = inv(A)*B
```

V1 161.29032
V2 261.29032
V3 154.83871

c) Check your answers in PartSim (or similar circuit simulator)

note: The current source in PartSim has an odd symbol where it's not obvious which way the current flows. So, I have a 50/50 shot at getting the direction correct. Turns out the current flows out of the minus terminal (or make the current negative if it comes out of the + terminal)

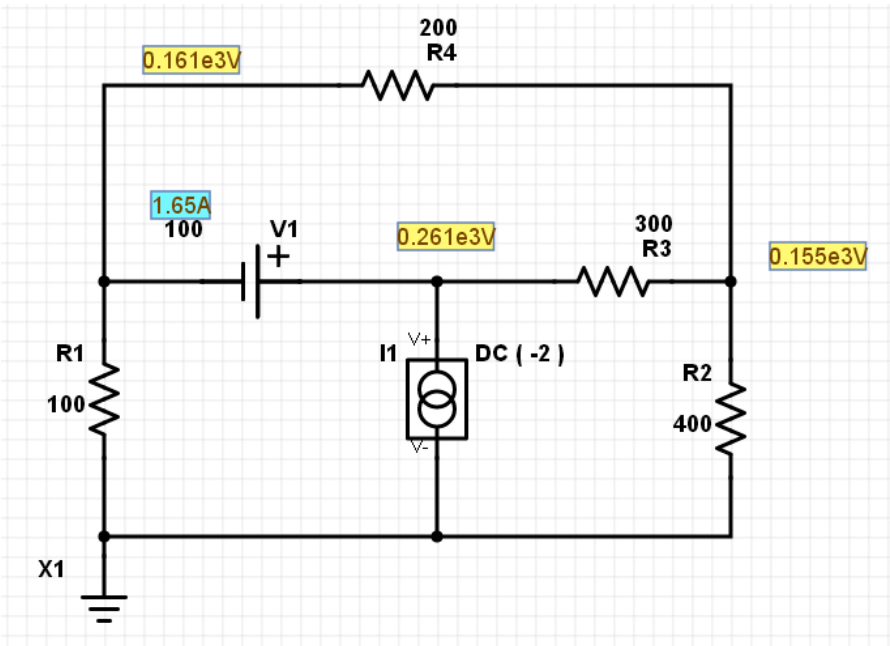

Comparing the results, calculations match simulation results.

	Computed part b	Simulated part c
V1	161.29032	161V
V2	261.29032	261V
V3	154.83871	155V

2. Current Loops:

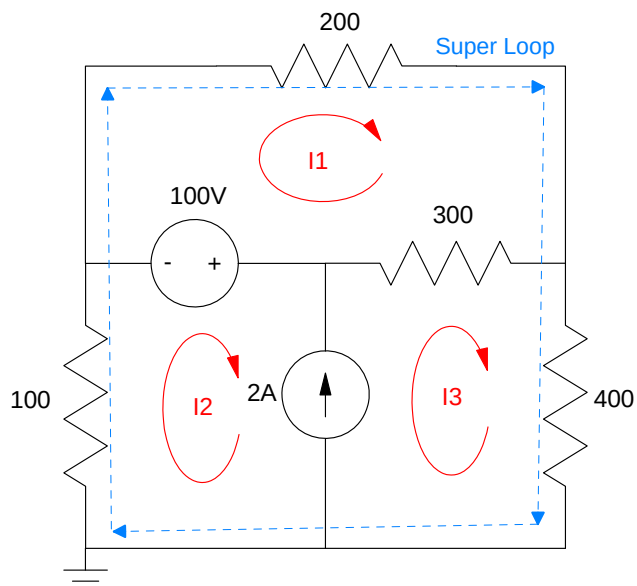

a) Write the current loop equations for the following circuit

$$I_3 - I_2 = 2$$ *current source*

$$200I_1 + 300(I_1 - I_3) + 100 = 0$$ *sum of voltages around loop I1 must equal zero*

$$100I_2 + 200I_1 + 400I_3 = 0$$ *sum of voltages around super loop must equal zero*

Note: There are multiple solutions. As long as you have three independent equations you can solve for three unknowns.

b) Solve using Matlab (or similar program)

Group terms

$$I_3 - I_2 = 2$$

$$500I_1 - 300I_3 = -100$$

$$100I_2 + 200I_1 + 400I_3 = 0$$

Place in matrix form

$$\begin{bmatrix} 0 & -1 & 1 \\ 500 & 0 & -300 \\ 200 & 100 & 400 \end{bmatrix} \begin{bmatrix} I_1 \\ I_2 \\ I_3 \end{bmatrix} = \begin{bmatrix} 2 \\ -100 \\ 0 \end{bmatrix}$$

Solve in Matlab

```
A = [0,-1,1 ; 500,0,-300 ; 200,100,400]

    0.     - 1.       1.
    500.     0.     - 300.
    200.     100.     400.

B = [2 ; -100 ; 0]

    2.
  - 100.
    0.

I = inv(A)*B
```

I1 0.0322581
I2 - 1.6129032
I3 0.3870968

Sidelight: To compare this to PartSim, you have to do some computations

$$I_1 = \left(\frac{161V - 155V}{200\Omega}\right) = 0.03A$$

$$I_2 = \left(\frac{0V - 161V}{100\Omega}\right) = -1.61A$$

$$I_3 = \left(\frac{155V}{400\Omega}\right) = 0.387A$$

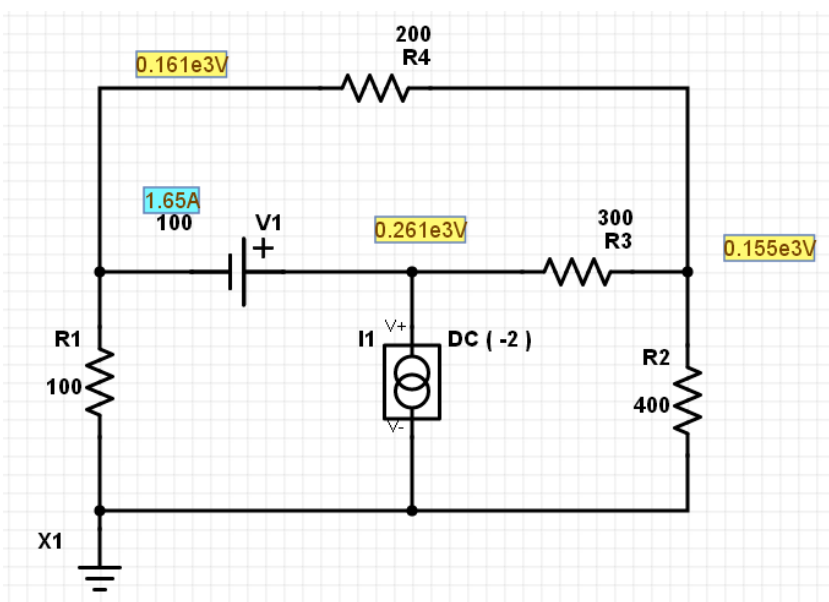

3. Voltage Nodes:

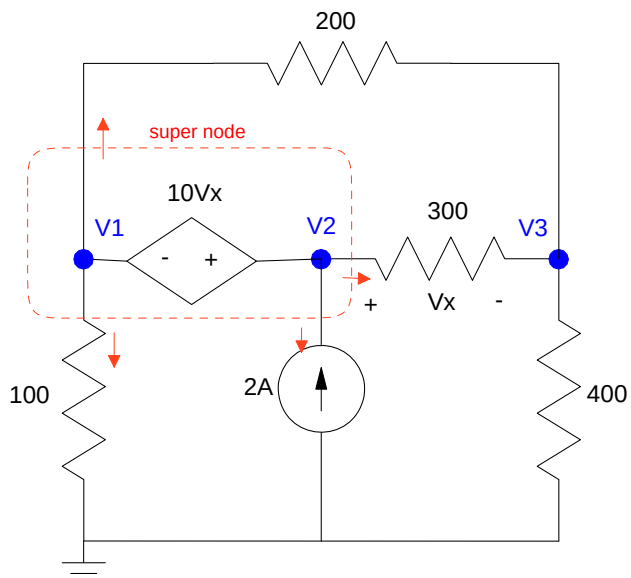

a) Write the voltage node equations for the following circuit

$$V_x = V_2 - V_3$$ *define Vx (gives a 4th equation)*

$$V_2 - V_1 = 10V_x$$ *dependent voltage source*

$$\left(\frac{V_3 - V_1}{200}\right) + \left(\frac{V_3 - V_2}{300}\right) + \left(\frac{V_3}{400}\right) = 0$$ *sum of current from node V3 is zero*

$$\left(\frac{V_1 - V_3}{200}\right) + \left(\frac{V_1}{100}\right) + \left(\frac{V_2 - V_3}{300}\right) - 2 = 0$$ *sum of current from the supernode is zero*

b) Solve using Matlab (or similar program)

Group terms

$$V_2 - V_3 - V_x = 0$$

$$V_2 - V_1 - 10V_x = 0$$

$$\left(\frac{-1}{200}\right)V_1 + \left(\frac{-1}{300}\right)V_2 + \left(\frac{1}{200} + \frac{1}{300} + \frac{1}{400}\right)V_3 = 0$$

$$\left(\frac{1}{200} + \frac{1}{100}\right)V_1 + \left(\frac{1}{300}\right)V_2 - \left(\frac{1}{200} + \frac{1}{300}\right)V_3 = 2$$

Place in matrix form

$$\begin{bmatrix} 0 & 1 & -1 & -1 \\ -1 & 1 & 0 & -10 \\ \left(\frac{-1}{200}\right) & \left(\frac{-1}{300}\right) & \left(\frac{1}{200}+\frac{1}{300}+\frac{1}{400}\right) & 0 \\ \left(\frac{1}{200}+\frac{1}{100}\right) & \left(\frac{1}{300}\right) & -\left(\frac{1}{200}+\frac{1}{300}\right) & 0 \end{bmatrix} \begin{bmatrix} V_1 \\ V_2 \\ V_3 \\ V_x \end{bmatrix} = \begin{bmatrix} 0 \\ 0 \\ 0 \\ 2 \end{bmatrix}$$

Solve in Matlab

```
a1 = [0,1,-1,-1];
a2 = [-1,1,0,-10];
a3 = [-1/200,-1/300,1/200+1/300+1/400,0];
a4 = [1/200+1/100,1/300,-1/200-1/300,0];
A = [a1;a2;a3;a4]

    0.       1.         - 1.         - 1.
  - 1.       1.           0.         - 10.
  - 0.005  - 0.0033333    0.0108333    0.
    0.015    0.0033333  - 0.0083333    0.

B = [0;0;0;2]

    0.
    0.
    0.
    2.

V = inv(A)*B
```

V1 172.06704
V2 105.02793
V3 111.73184
Vx - 6.7039106

4. Current Loops:

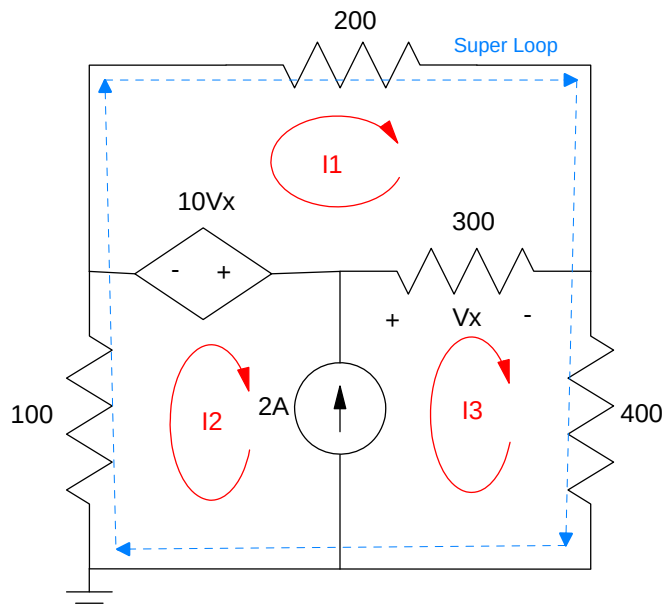

a) Write the current loop equations for the following circuit

$V_x = 300(I_3 - I_1)$ *define the control votlages in terms of I1, I2, I3*

$I_3 - I_2 = 2$ *current source*

$200I_1 + 300(I_1 - I_3) + 10V_x = 0$ *voltages around loop I3 must sum to zero*

$100I_2 + 200I_1 + 400I_3 = 0$ *voltages around the super loop must sum to zero*

b) Solve using Matlab (or similar program). Group terms

$$300I_3 - 300I_1 - V_x = 0$$

$$I_3 - I_2 = 2$$

$$500I_1 - 300I_3 + 10V_x = 0$$

$$100I_2 + 200I_1 + 400I_3 = 0$$

Place in matrix form

$$\begin{bmatrix} -300 & 0 & 300 & -1 \\ 0 & -1 & 1 & 0 \\ 500 & 0 & -300 & 10 \\ 200 & 100 & 400 & 0 \end{bmatrix} \begin{bmatrix} I_1 \\ I_2 \\ I_3 \\ V_x \end{bmatrix} = \begin{bmatrix} 0 \\ 2 \\ 0 \\ 0 \end{bmatrix}$$

Solve in Matlab

```
A = [-300,0,300,-1 ; 0,-1,1,0 ; 500,0,-300,10 ; 200,100,400,0]

  - 300.    0.      300.   - 1.
    0.    - 1.      1.      0.
    500.    0.    - 300.    10.
    200.    100.    400.    0.

B = [0;2;0;0]

    0.
    2.
    0.
    0.

I = inv(A)*B

    0.3016760
  - 1.7206704
    0.2793296
  - 6.7039106
```

As a check

$$V_1 = -100 I_2 = 172.06V \quad \textit{matches voltage calculations}$$

$$V_3 = 400 I_3 = 111.728V \quad \textit{matches voltage calculations}$$

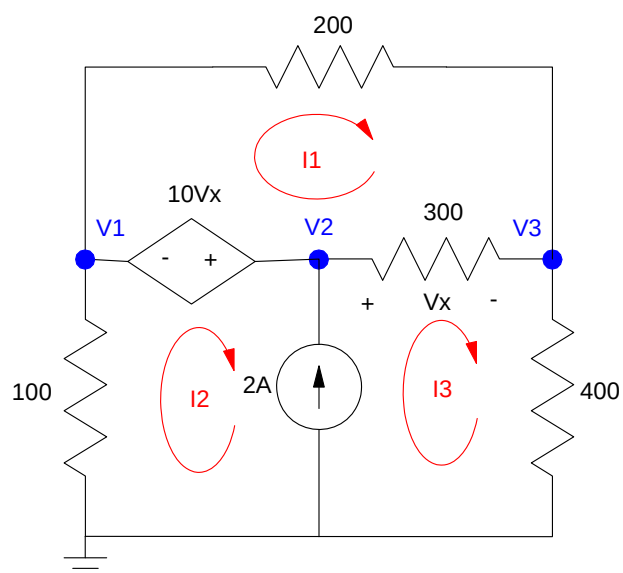

Problem 3 & 4

5) Assume Vin contains a DC and 1.6Hz (10 rad/sec) signal:

$$V_{in} = 10 + 3\sin(10t)$$

a) Determine the impedances of the inductor, capacitor, and resistor at DC and 10 rad/sec

b) Determine the voltage, Y, using phasor analysis

DC Analysis

$$V_{in} \rightarrow 10 + j0$$

$$L \rightarrow j\omega L = 0$$

$$C \rightarrow \frac{1}{j\omega C} = \infty$$

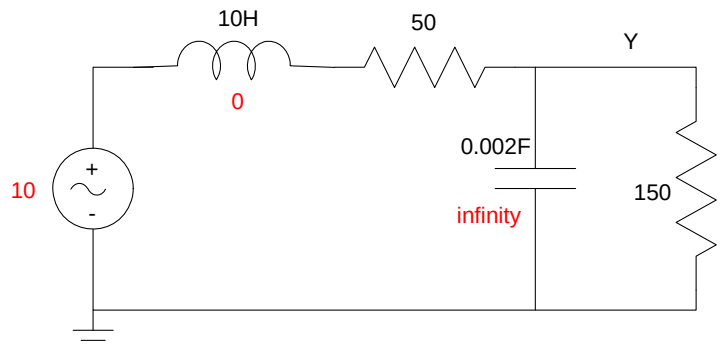

By voltage division

$$Y = \left(\frac{150}{150+50}\right) \cdot 10 = 7.5V$$

AC Analysis

$$\omega = 10$$

$$V_{in} \rightarrow 0 - j3$$ *real = cosine, -imag = sine*

$$L \rightarrow j\omega L = j100$$

$$C \rightarrow \frac{1}{j\omega C} = -j50$$

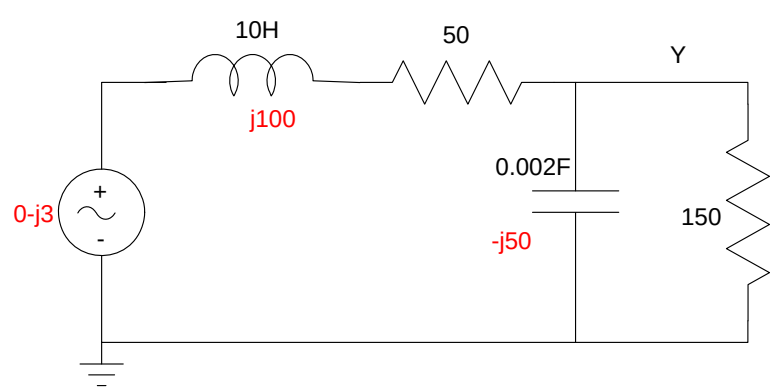

Combine the resistor and capacitor in parallel

$$150 || -j50 = \left(\frac{1}{150} + \frac{1}{-j50}\right)^{-1} = 15 - j45$$

By voltage division

$$Y = \left(\frac{(15-j45)}{(15-j45)+(50+j100)}\right)(0 - j3)$$

$$Y = -1.5517 + j0.6207$$

meaning

$$y(t) = -1.5517\cos(10t) - 0.6207\sin(10t)$$

The total answer is the DC term plus the AC term

$$y(t) = DC + AC$$

$$\boxed{y(t) = 7.5 - 1.5517\cos(10t) - 0.6207\sin(10t)}$$

Note: If you prefer polar form

$$Y = 1.6713\angle 158.2^0$$

meaning

$$y(t) = 1.6713\cos(10t + 158.2^0)$$

The total answer (in polar form) is then...

$$\boxed{y(t) = 7.5 + 1.6713\cos(10t + 158.2^0)}$$

Both answers are correct

c) Check your answer using PartSim (or similar program)

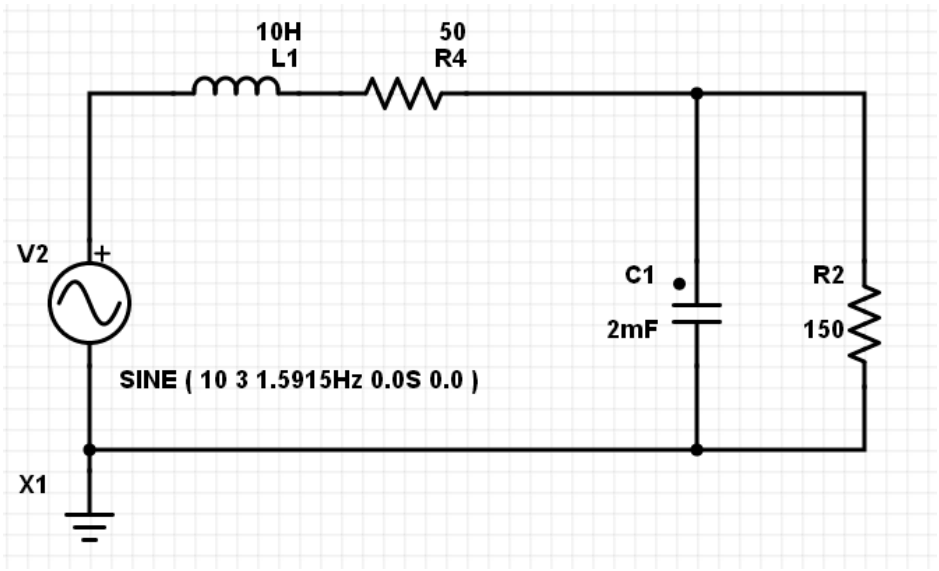

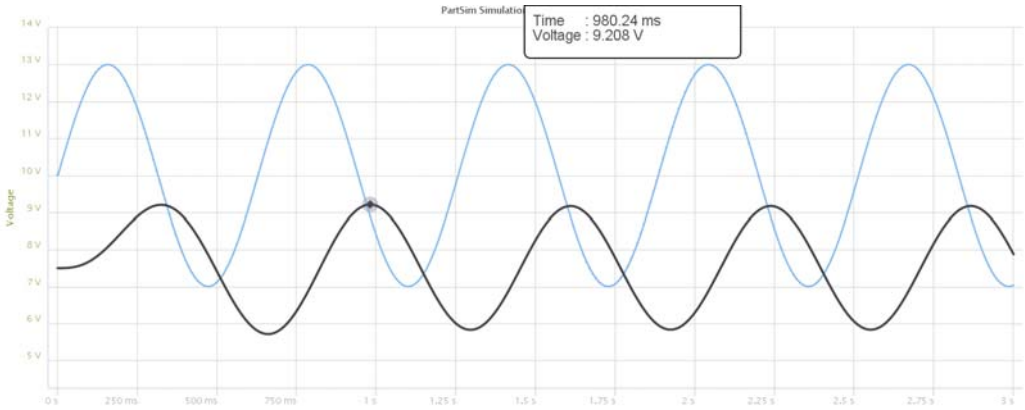

Comparing to calculations:

	Calculated part b	Simulated part c
DC Level	7.5V	7.5V
AC (Vpp)	3.3426Vpp	3.338Vpp

6) Assume Vin contains a DC and 16Hz (100 rad/sec) signal:

$$V_{in} = 10 + 3\sin(100t)$$

a) Determine the impedances of the inductor, capacitor, and resistor at DC and 100 rad/sec

b) Determine the voltage, Y, using phasor analysis

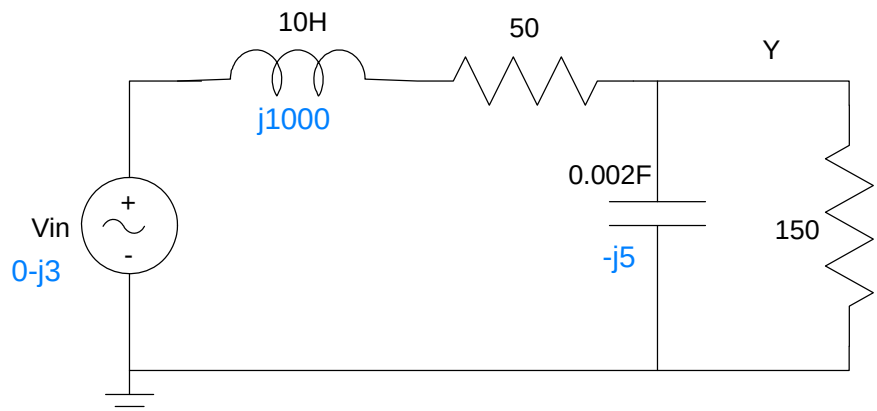

Problem 5 & 6:

DC: No change from problem 5

Y = 7.5V

AC: Vin = 3 sin(100t)

$$V_{in} \rightarrow 0 - j3$$

$$L \rightarrow j\omega L = j1000$$

$$C \rightarrow \frac{1}{j\omega C} = -j5$$

Add the 150 Ohms and the capacitor in parallel

$$150 || -j5 = 0.1665 - j4.9945$$

By voltage division

$$Y = \left(\frac{(0.1665 - j4.9945)}{(0.1665 - j4.9945) + (50 + j1000)}\right)(0 - j3)$$

$$Y = -0.0013 + j0.0015$$

$$Y = 0.0150\angle 94.8^0$$

meaning

$$y(t) = 0.0150\cos(100t + 94.8^0)$$

The total answer is the DC and AC term

$$\boxed{y(t) = 7.5 + 0.0150\cos(100t + 94.8^0)}$$

c) Check your answer in PartSim

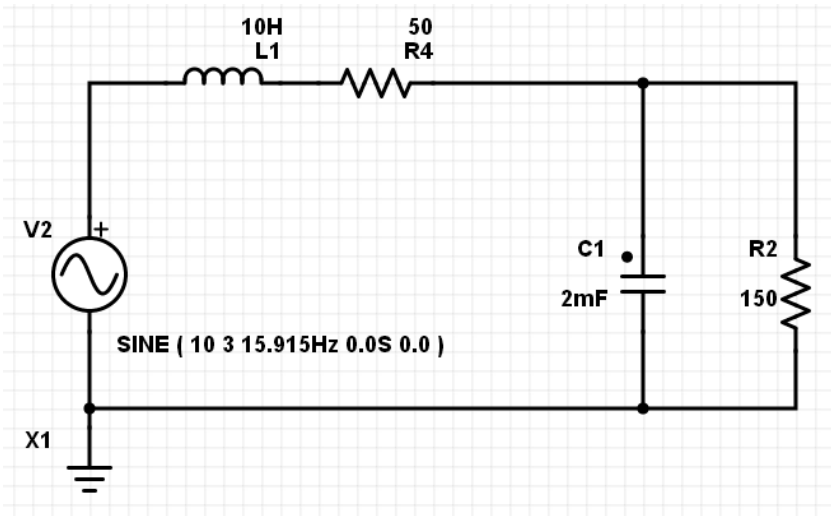

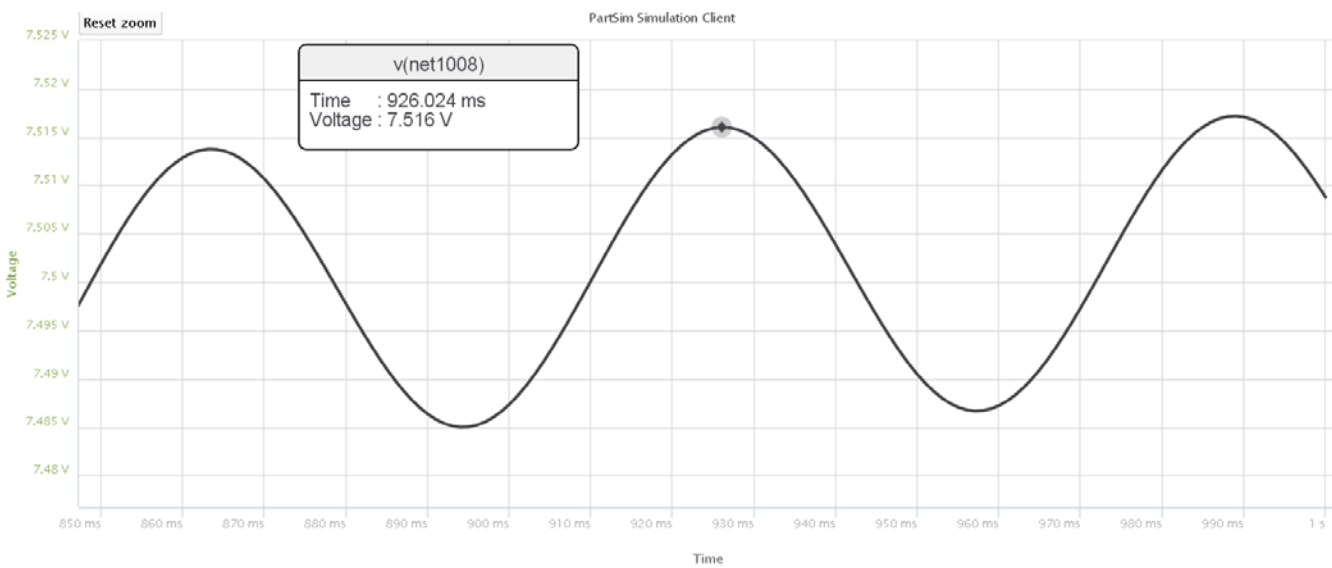

Comparint simulation to calculation results:

	Calculated part b	Simulated part c
DC Level	7.5V	7.5V
AC (Vpp)	0.0301 Vpp	0.032 Vpp