ECE 320 - Solution #4

Max/Min Circuits, Clipper Circuits, Transistors. Spring 2019

Max/Min:

1) Determine the voltages and currents for the following max/min circuit. What function does this circuit implement? Y = f(A, B, C, D)

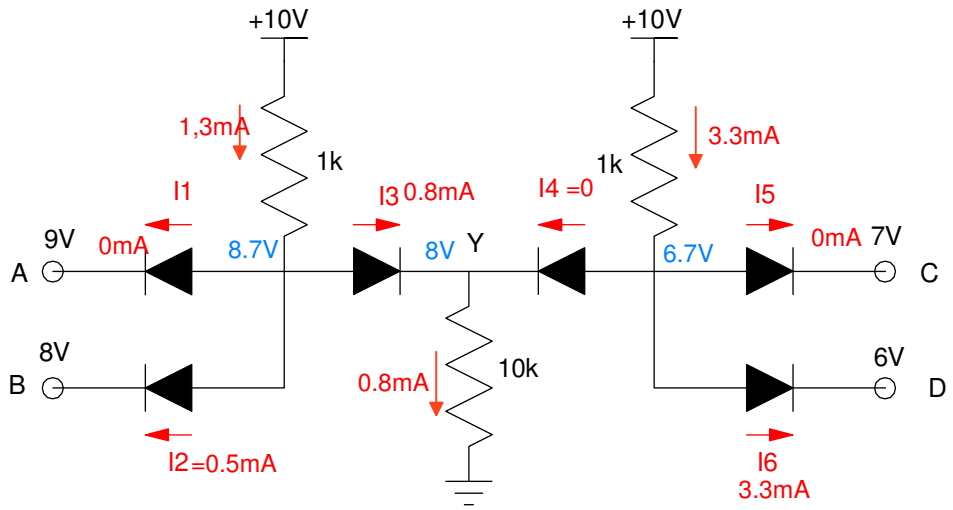

2) Check your results in PartSim

	I1	I2	I3	I4	I5	I6
Calculated	0 mA	0.5mA	0.8mA	0 mA	0 mA	3.3 mA
Simulated	54 pA	0.694 mA	0.799 mA	?	54 pA	3.41 mA

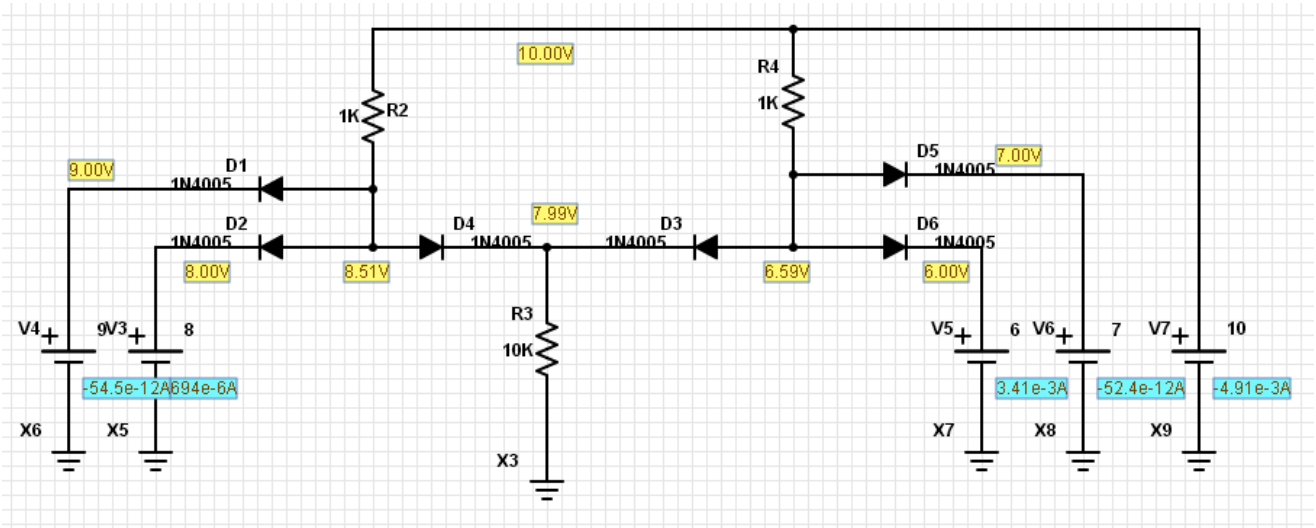

Clipper Circuits:

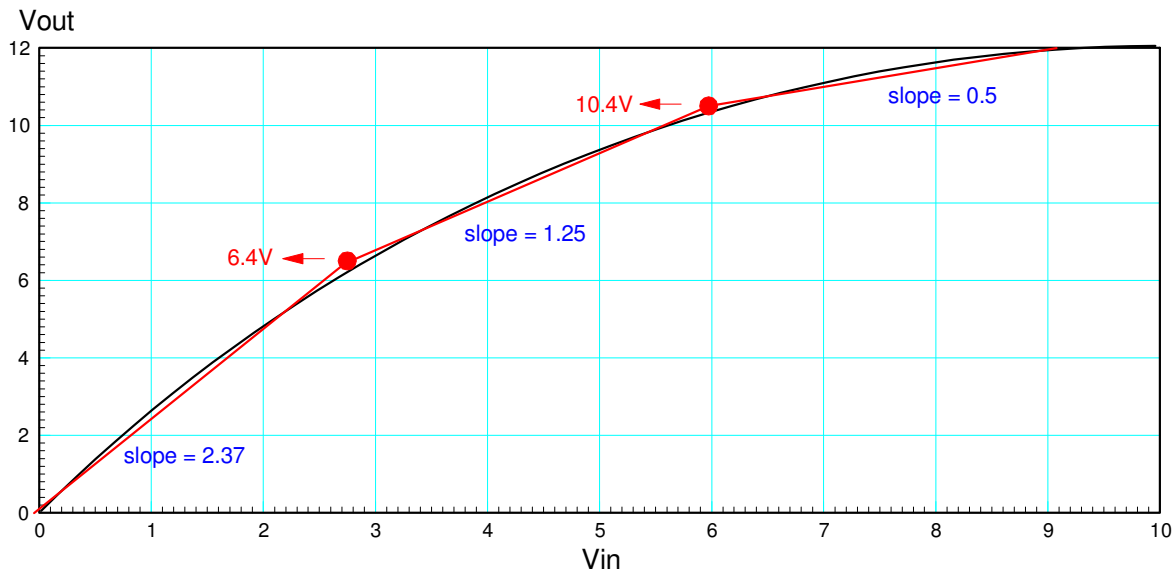

Prob lem 3

3) Design a circuit to approximate the following function subject to the following requirements:

- Input: 0 .. 10V, capable of 100mA
- Output: 100k resistor
- Relationship: Graph below, +/- 200mV

Region 1: Slope = 2.37. Add an amplifier with a gain of 2.37

$$gain = 1 + \frac{R_2}{R_1}$$

Region 2: Slope = 1.25

$$2.37\left(\frac{R_4}{1k+R_4}\right) = 1.25$$

$$R_4 = \left(\frac{1.25}{2.37-1.25}\right)1k = 1116\Omega$$

Region 3: Slope = 0.5

$$2.37\left(\frac{R_{45}}{1k+R_{45}}\right) = 0.5$$

$$R_{45} = \left(\frac{0.5}{2.37-0.5}\right)1k = 267\Omega$$

$$1116\Omega \,||\, R_5 = 267\Omega$$

$$R_5 = 352\Omega$$

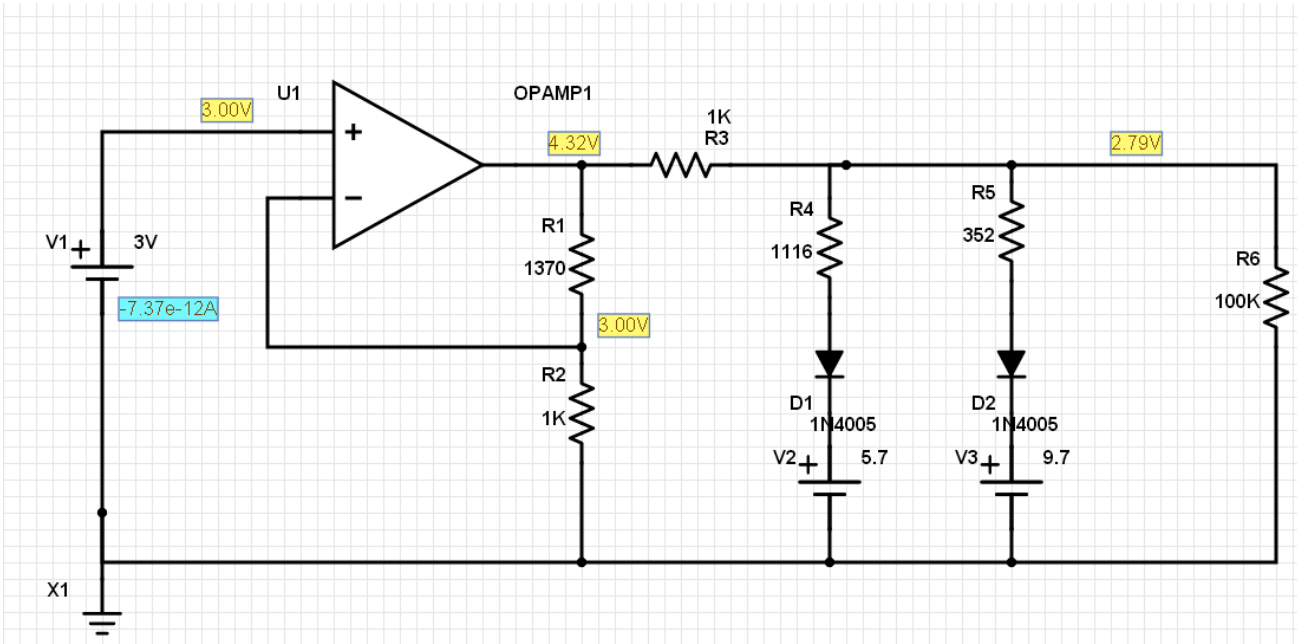

4) Check your design in PartSim

Run a DC Sweep of voltage source V1 from 0.00 to 10.00 Volts

- Note that the slope changes when the diodes turn on (6.4V and 10.4V)

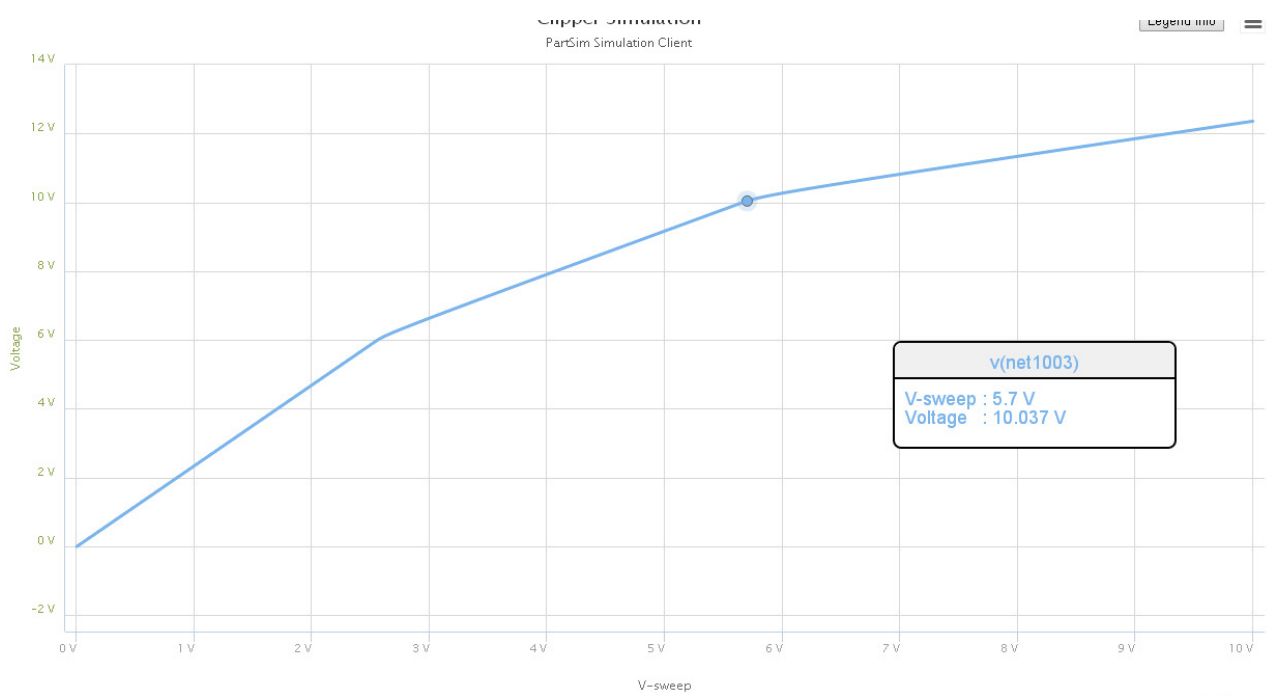

5) Design a circuit which meets the following requirements:

- Input: -10 .. +10V, capable of 100mA
- Output: 1k resistor
- Relationship:

$$V_{out} = \begin{cases} +5V & V_{in} > +5V \\ V_{in} & -5V < V_{in} < +5V \\ -5V & V_{in} < -5V \end{cases}$$

Pick a zener diode with about a 4.3V zener voltage (plus the 0.7V across the other zener gives 5.0V)

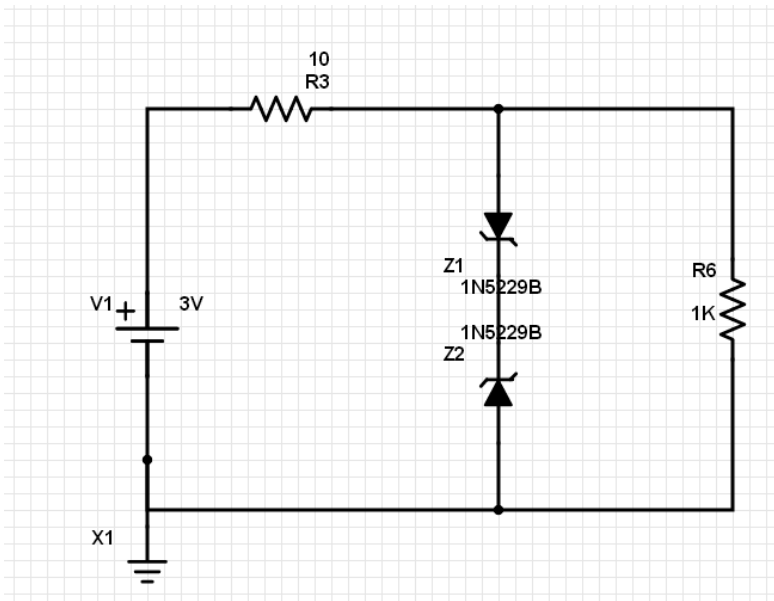

Checking in PartSim (optional)

- This clips the output at +5V and -5V as desired