ECE 320 - Quiz #1 - Name _____

EE 206 Review. January 24, 2020

1) Determine the resistance Rab

Rab = 780.702

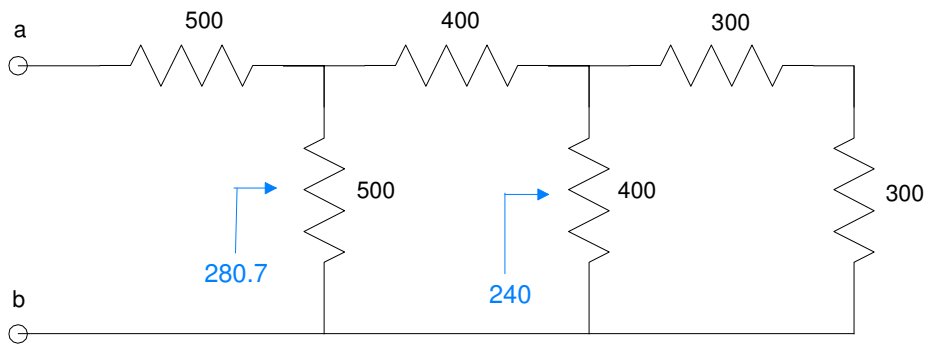

300 + 300 = 600

600 || 400 = 240

240 + 400 = 640

640 || 500 = 280.702

280.702 + 500 = 780.702

2) Determine the resistace Rab (it will be a complex number)

Rab = 324.159 + j468.419

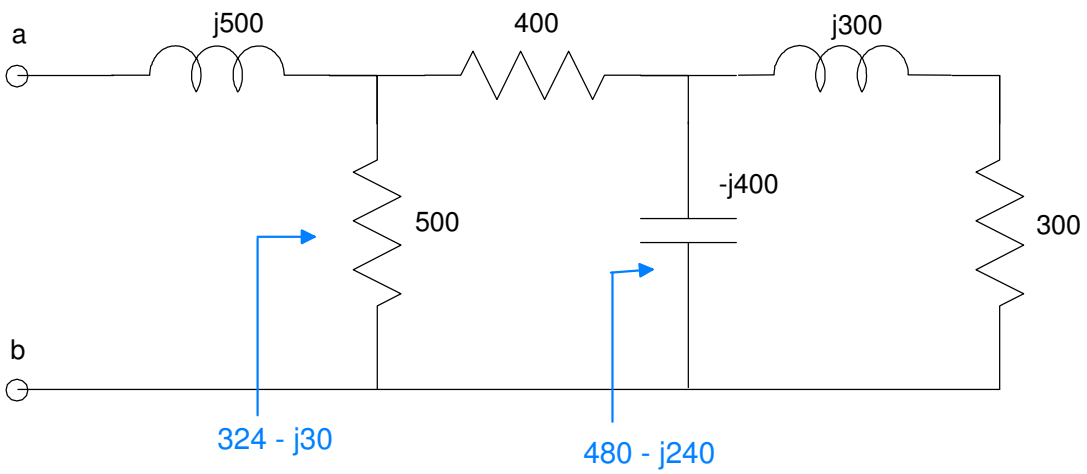

300 + j300 = 300 + j300

(300 + j300) || (-j400) = 480 - j240

(480 - j240) + (400) = 880 - j240

(880 - j240) || 500 = 324.159 - j30.581

(324.159 - j30.581) + (j500) = 324.159 + j469.419

3) Give N voltage node equations to solve for the N unknown voltages.

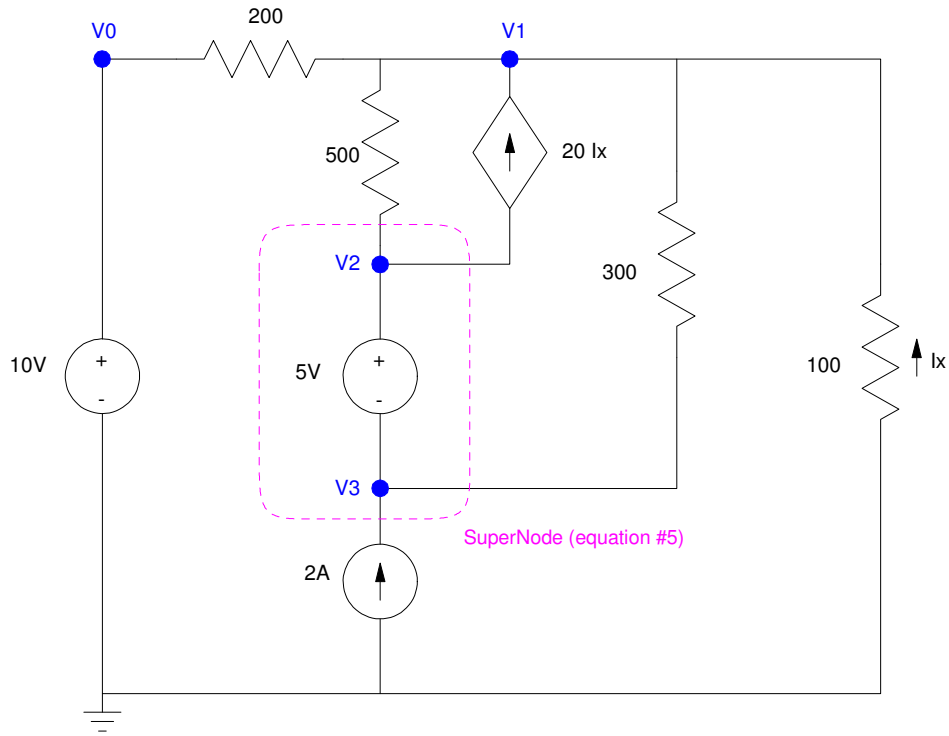

- $V_0 = 10$
- $V_2 - V_3 = 5$
- $I_x = \left(\frac{0-V_1}{100}\right)$
- $\left(\frac{V_1-V_0}{200}\right) + \left(\frac{V_1-V_2}{500}\right) - 20I_x + \left(\frac{V_1-V_3}{300}\right) + \left(\frac{V_1}{100}\right) = 0$
- $\left(\frac{V_2-V_1}{500}\right) + 20I_x + \left(\frac{V_3-V_1}{300}\right) - 2 = 0$

4) Give N current loop equations to solve for the N unknown currents

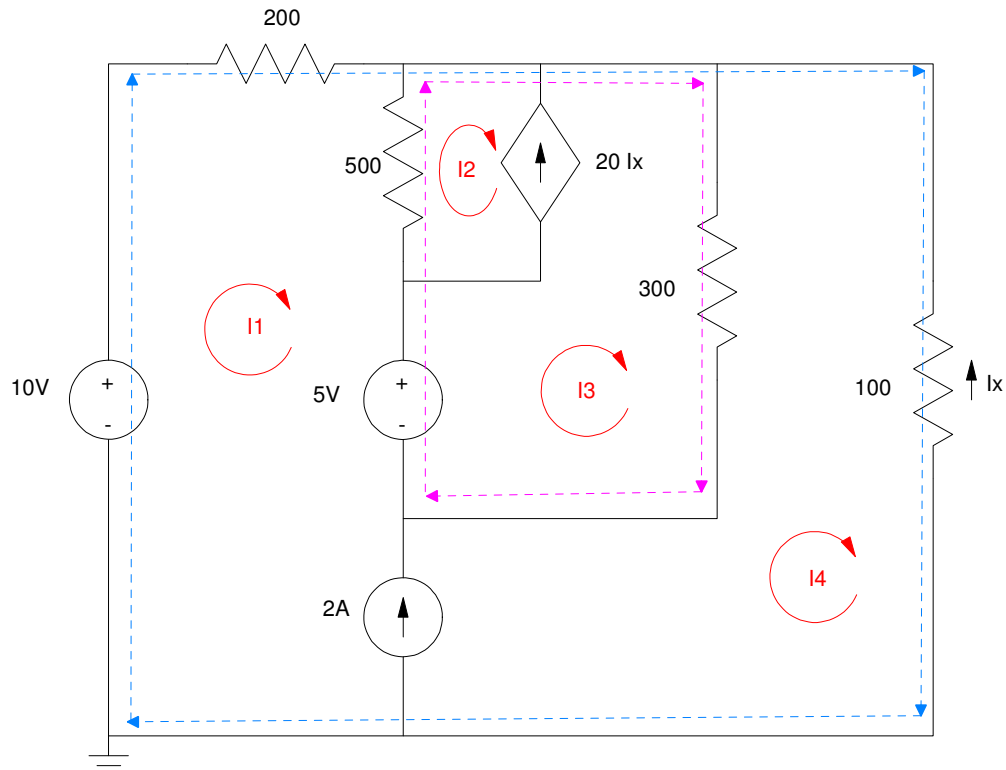

- $I_x = -I_4$
- $I_4 - I_1 = 2$
- $I_3 - I_2 = 20I_x$
- $-5 + 500(I_2 - I_1) + 300(I_3 - I_4) = 0$ *pink superloop*
- $-10 + 200I_1 + 100I_4 = 0$ *blue superloop*

5) Signals X and Y are displayed on an oscilloscope. Give the phasor representation for these two voltages

Frequency (Hz)	X		Y	
	Amplitude	Phase	Amplitude	Phase
66.67 hz	**8.2Vp** **16.4Vpp** **5.8Vrms**	**-72 deg**	**6.2Vp** **12.4Vpp** **4.38Vrms**	**-124 deg**

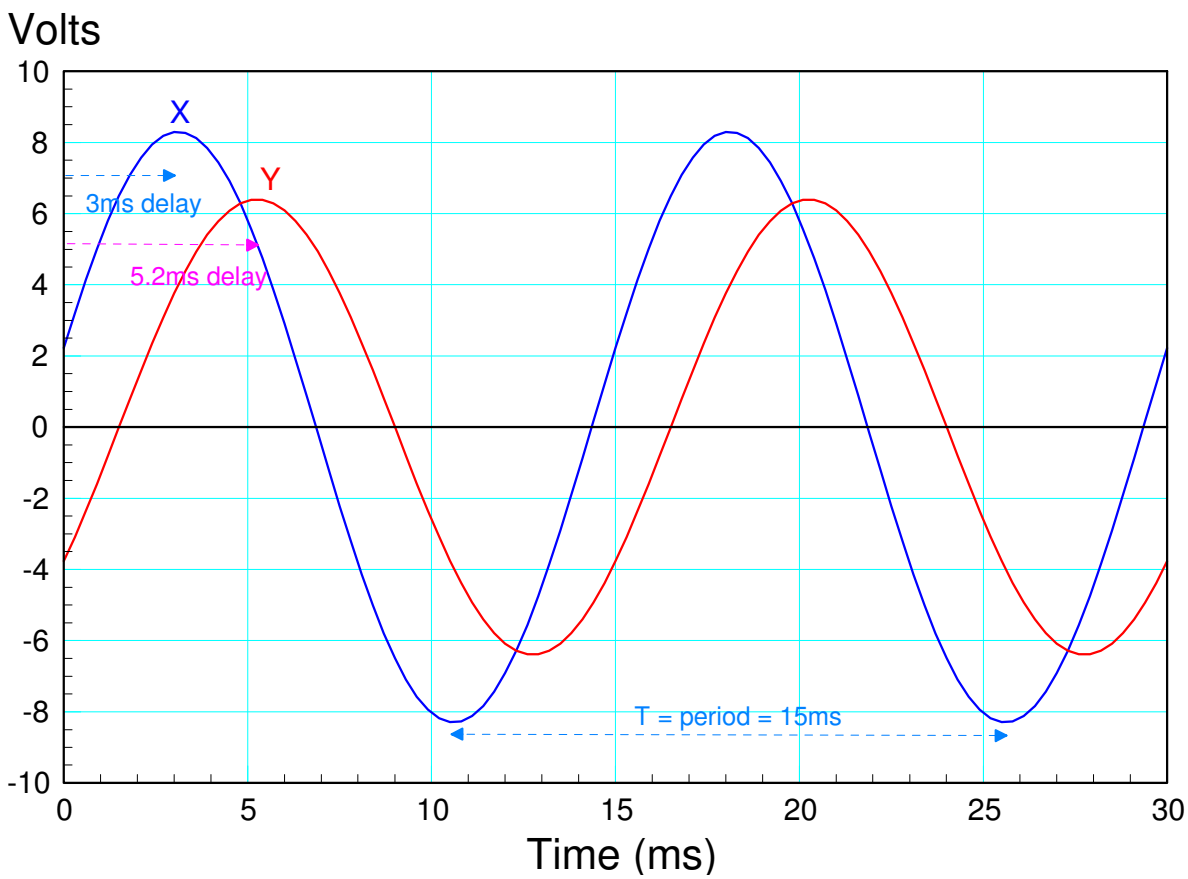

$$f = \frac{1}{period} = \frac{1}{15ms} = 66.67Hz$$

$$\theta_x = -\left(\frac{\text{delay}}{\text{period}}\right)360^0 = -\left(\frac{3ms}{15ms}\right)360^0 = -72^0$$

$$\theta_y = -\left(\frac{\text{delay}}{\text{period}}\right)360^0 = -\left(\frac{5.2ms}{15ms}\right)360^0 = -124^0$$

6) Determine V2(t) assuming

$$V_1(t) = 12 + 15\sin(400t)$$

V2(t) = 10.909 - 0.273 cos(400t) - 0.926 sin(400t)

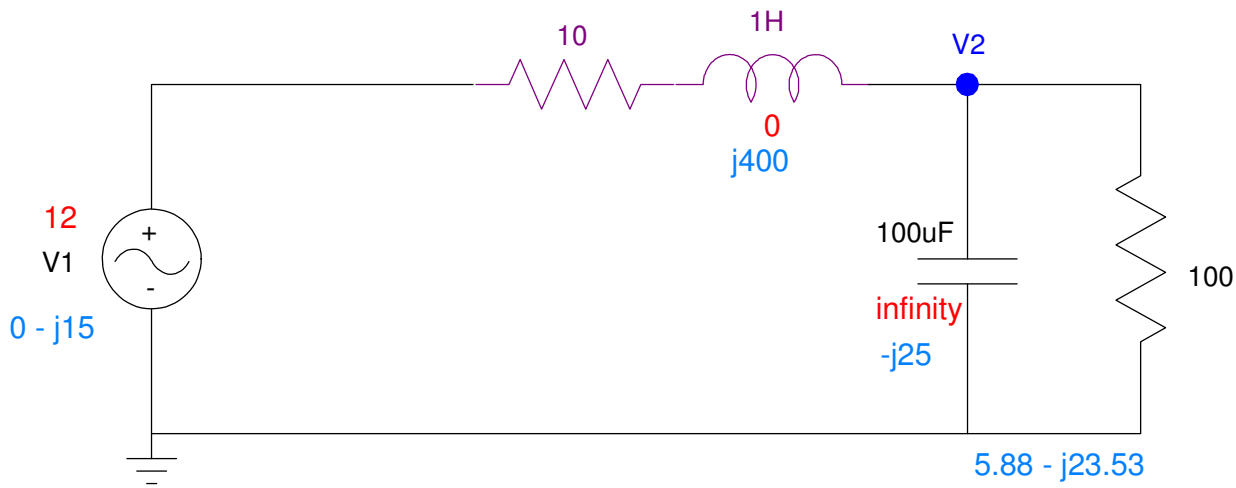

DC (red)

$$V_2 = \left(\frac{100}{100+10}\right)12 = 10.909V$$

AC (blue)

$$100||(-j25) = 5.88 - j23.53$$

$$V_2 = \left(\frac{(5.88-j23.53)}{(5.88-j23.53)+(10+j400)}\right)(0 - j15)$$

$$V_2 = -0.273 + j0.926$$

real = cosine, -imag = sine

Bonus! Bernie Sanders Trivia!!! Which is the oldest (circle one)?

- The oldest edible cheese (Bleader): 18 years old (Bitto Storico), 40 years (Wisconsin Cheddar)
- **The oldest (drinkable) champaign: 170 years (found in a ship wreck in the Baltic Sea)**
- Godzilla (first movie): Released 1954, making Godzilla 66 years old
- Bernie Sanders: 78 years old