ECE 320 - Quiz #3 - Name _____

Diodes, AC to DC Converters - Spring 2020

1) Determine the voltages and currents for the following circuit. Assume ideal silicon diodes (Vf = 0.7V).

V1	V2	V3	Id1	Id2	Id3

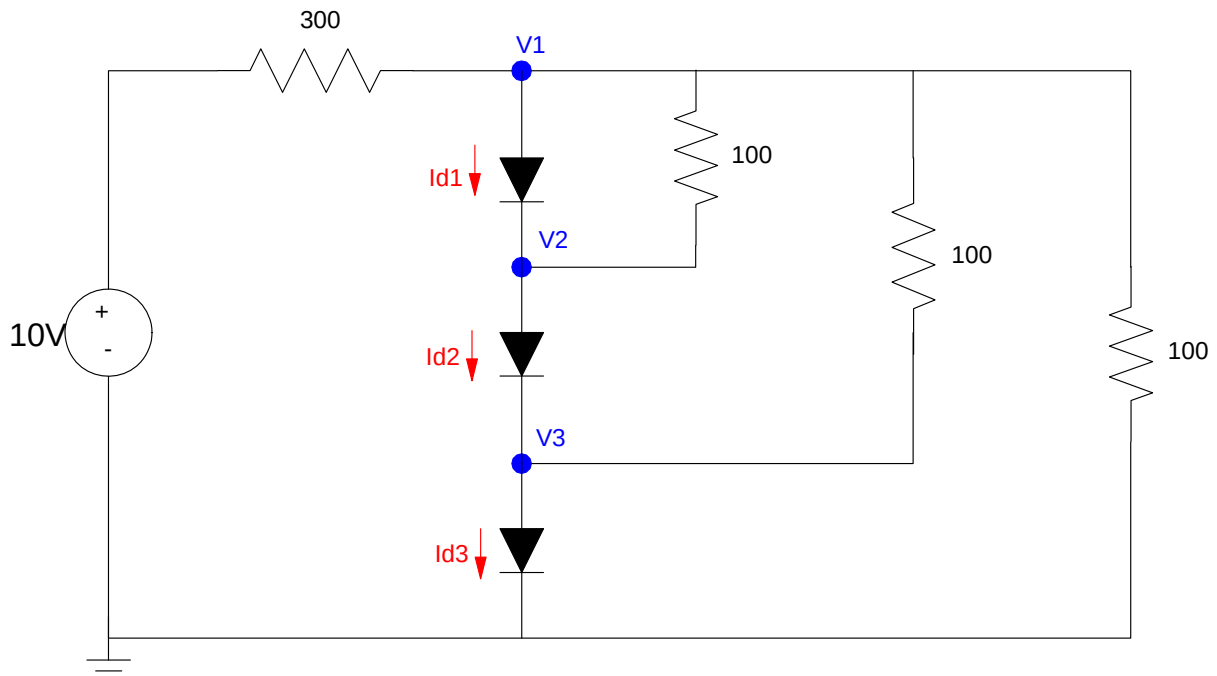

2) Determine the voltages and currents for the following circuit. Assume ideal silicon diodes (Vf = 0.7V).

V1	V2	V3	Id1	Id2	Id3

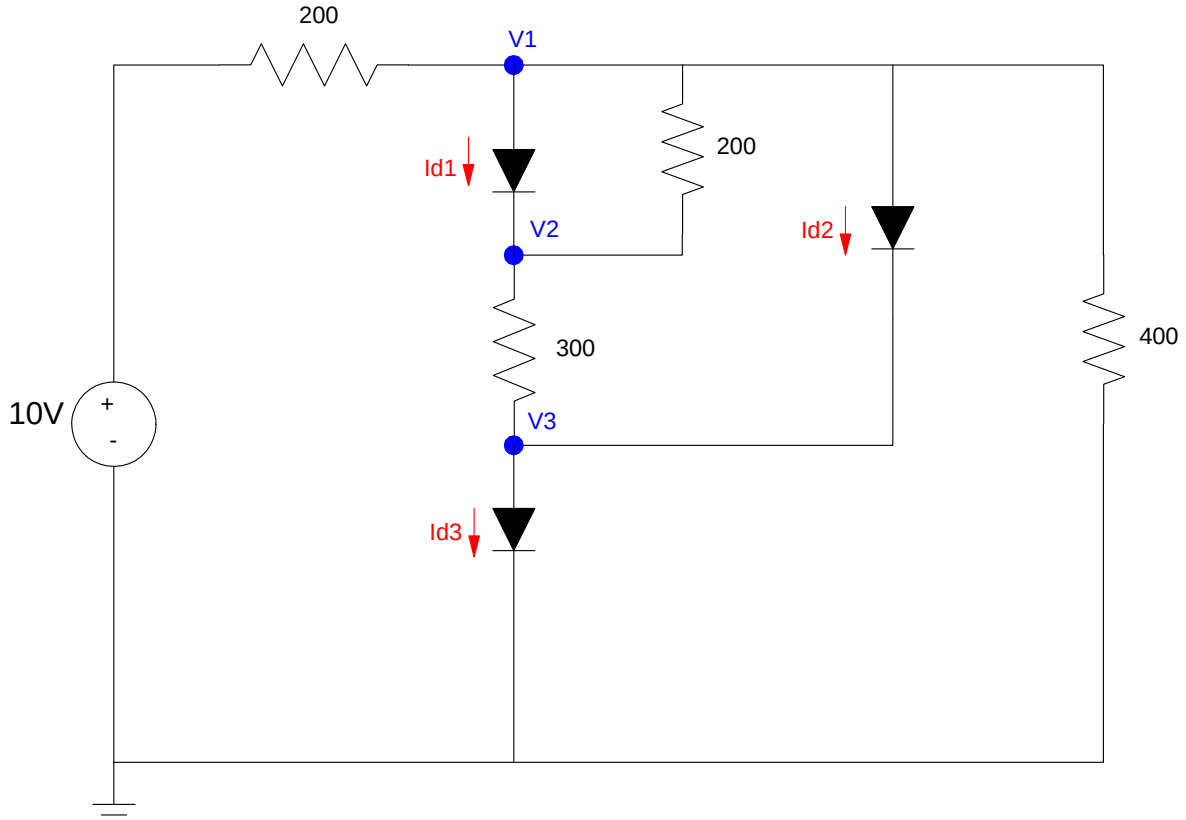

3) Determine the resistances so that the following RGB LED outputs baby blue:

- Red = 7800 mcd
- Green = 9570 mcd
- Blue = 9410 mcd

The specifications for the RGB LED are:

color	Vf	mcd @ 20mA
red	2.0V	10,000
green	3.0V	10,000
blue	3.2V	10,000

Rr	Rg	Rb

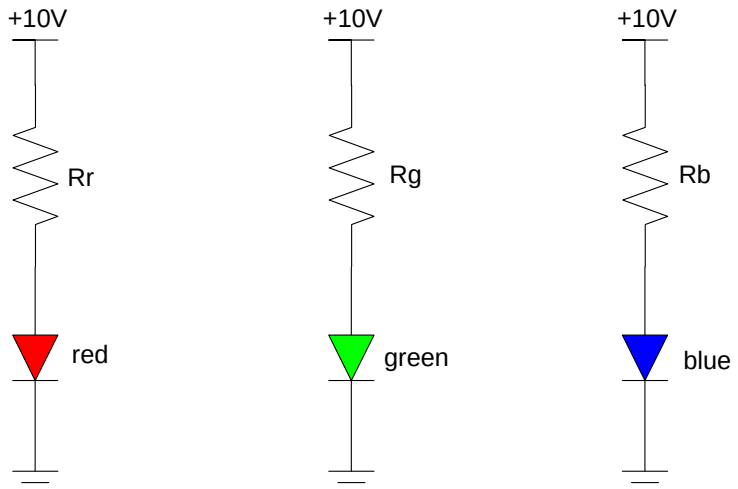

4) Determine the voltage V1 and the currents through the red, green, and blue LED

color	Vf	mcd @ 20mA
red	2.0V	10,000
green	3.0V	10,000
blue	3.2V	10,000

V1	Ir	Ig	Ib

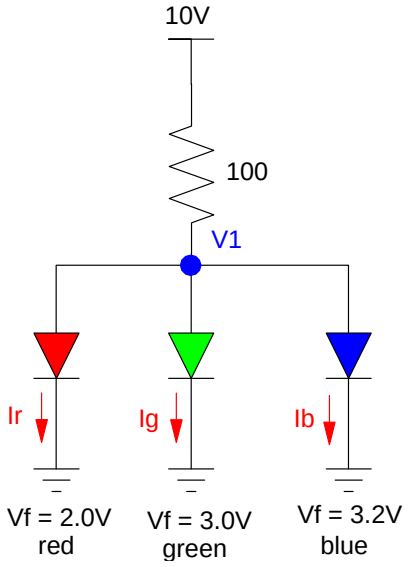

5) Determine the voltages V1 and V2 (both DC and AC)

V1		V2	
DC (mean(V1))	AC (V1pp)	DC (mean(V2))	AC (V2pp)

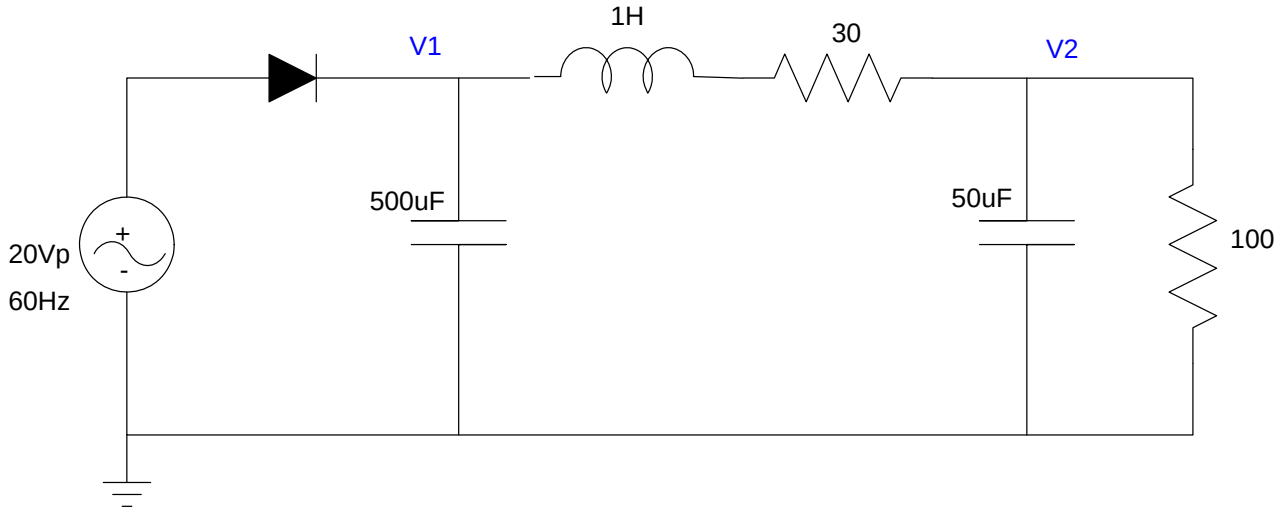

6) Determine R, C1, and C2 so that

- The DC current through R is 200mA
- The ripple at V1 is 3Vpp and
- The ripple at V2 = 0.2Vpp

C1	C2	R

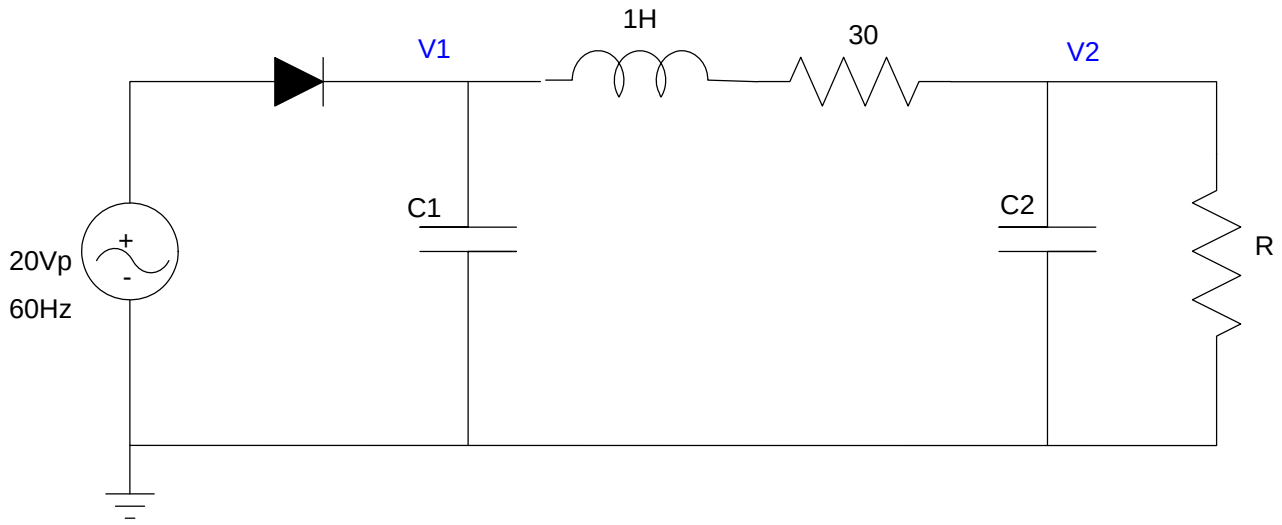

Bernie Sanders Bonus! Bernie Sanders and Quicksilver (of the X-men) leave Iowa to go to New Hampshire. Bernie flies an SR-71 (the world's fastest airplane) at 6 times the speed of sound. Quicksilver runs. Who gets to New Hampshire first?