ECE 320 - Quiz #3 - Name _____

Diodes, AC to DC Converters - Spring 2020

1) Determine the voltages and currents for the following circuit. Assume ideal silicon diodes (Vf = 0.7V).

V1	V2	V3	Id1	Id2	Id3
1.630V	**1.40V**	**0.70V**	**0mA**	**2.30mA**	**11.60mA**

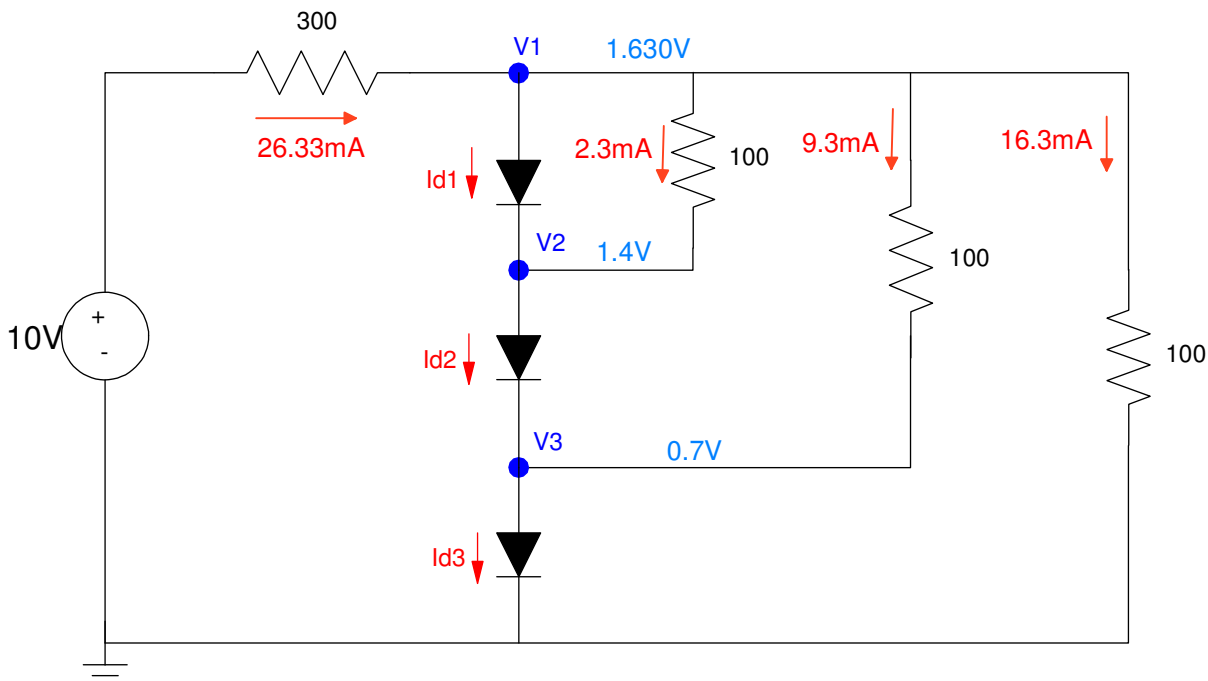

If all three diodes are on, you draw too much current for diode1 to be on

Assume diode1 is off

$$\left(\frac{V_1-10}{300}\right)+0+\left(\frac{V_1-1.4}{100}\right)+\left(\frac{V_1-0.7}{100}\right)+\left(\frac{V_1}{100}\right)=0$$

$$V_1 = 1.630V$$

$$I_{d1} = 0 \qquad \text{off}$$

$$I_{d2} = \left(\frac{V_1-V_2}{100}\right) = 2.30mA$$

$$I_{d3} = I_{d2} + \left(\frac{V_1-V_3}{100}\right) = 11.6mA$$

2) Determine the voltages and currents for the following circuit. Assume ideal silicon diodes (Vf = 0.7V).

V1	V2	V3	Id1	Id2	Id3
1.40V	**1.12V**	**0.70V**	**0mA**	**38.1mA**	**39.5mA**

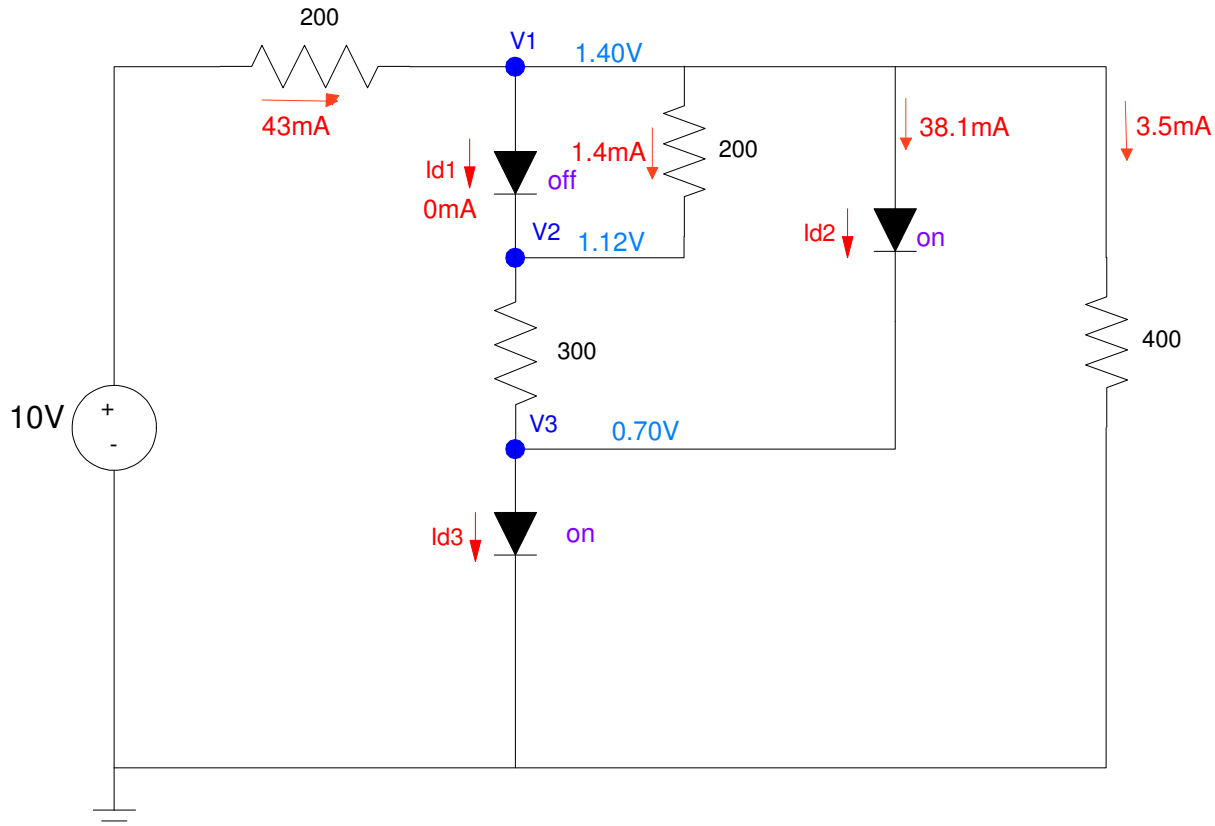

Diode2 and Diode3 are on - making V1 = 1.4V

V3 = 0.7V

$$\left(\frac{10-1.4}{200}\right) = I_{d1} + \left(\frac{V_1-V_3}{500}\right) + I_{d2} + \left(\frac{V_1}{400}\right)$$

$$I_{d2} = 38.1mA$$

$$I_{d3} = I_{d2} + \left(\frac{V_1-V_3}{500}\right) = 39.5mA$$

$$V_2 = V_3 + \left(\frac{V_1-V_3}{500}\right)300 = 1.12V$$

3) Determine the resistances so that the following RGB LED outputs baby blue:

- Red = 7800 mcd
- Green = 9570 mcd
- Blue = 9410 mcd

The specifications for the RGB LED are:

color	Vf	mcd @ 20mA
red	2.0V	10,000
green	3.0V	10,000
blue	3.2V	10,000

Rr	Rg	Rb
512.8	**365.7**	**361.3**

$$I_r = \left(\frac{7{,}800mcd}{10{,}000mcd}\right)20mA = 15.6mA$$

$$R_r = \left(\frac{10V-2V}{15.6mA}\right) = 512.8\Omega$$

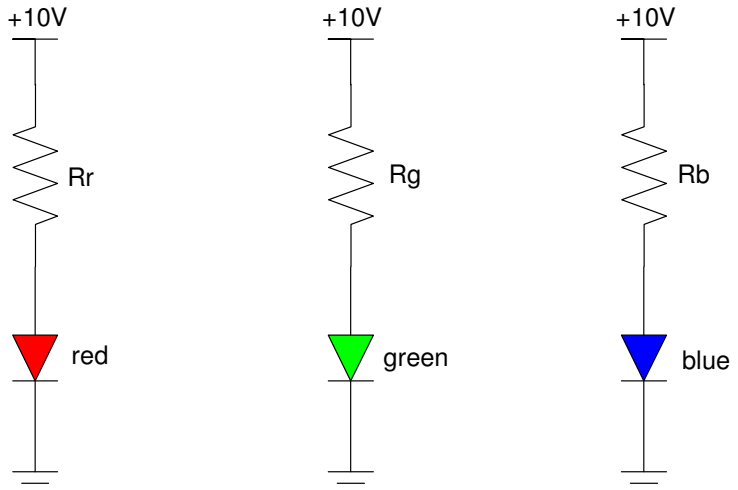

4) Determine the voltage V1 and the currents through the red, green, and blue LED

color	Vf	mcd @ 20mA
red	2.0V	10,000
green	3.0V	10,000
blue	3.2V	10,000

V1	Ir	Ig	Ib
2.0V	**80mA**	**0mA**	**0mA**
10.0V	**0mA**	**0mA**	**0mA**

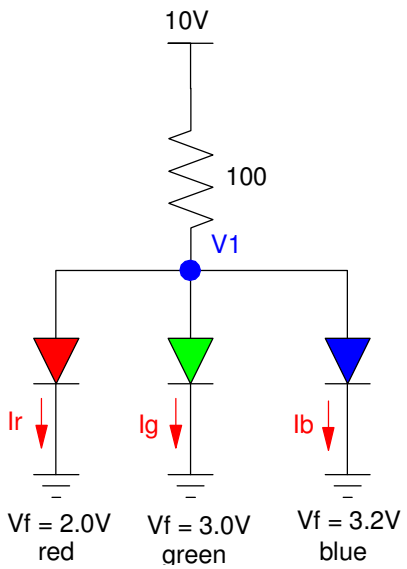

The red LED sets the voltage to 2.00V

The green and blue LED turn off.

The current is then

$$I_r = \left(\frac{10V-2V}{100\Omega}\right) = 80mA$$

This then burns out the red LED. All the current goes to the green LED (lowest Vf)

This then burns out the green LED. All the current goes to the blue LED

This then burns out.

The net result is three dead LEDs, no current, and V1 = 10V.

5) Determine the voltages V1 and V2 (both DC and AC)

V1		V2	
DC (mean(V1))	AC (V1pp)	DC (mean(V2))	AC (V2pp)
16.83V	**4.949Vpp**	**12.94V**	**0.683Vpp**

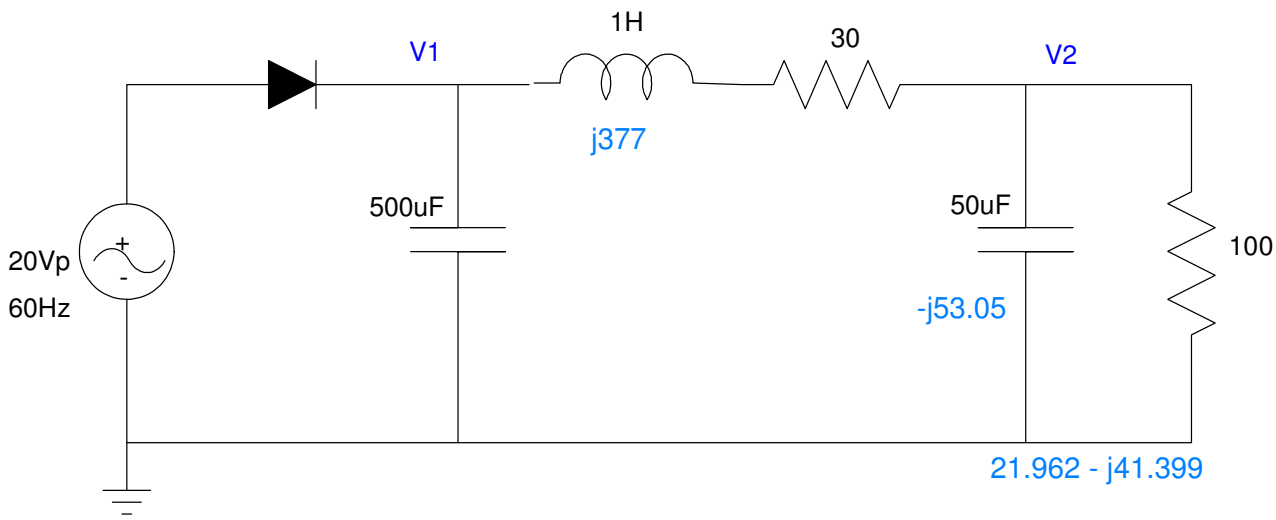

DC: V1(peak) = 19.3V

$$I \approx \left(\frac{19.3V}{130\Omega}\right) = 148.5mA$$

$$I = C\frac{dV}{dt}$$

$$148.5mA = 500\mu F \cdot \frac{dV}{1/60s}$$

$$dV = 4.949V_{pp} \quad \text{(AC)}$$

$$V_1 = 19.3V - \frac{1}{2} \cdot 4.949V = 16.83V \quad \text{(DC)}$$

$$V_2 = \left(\frac{100}{100+30}\right) 16.83V = 12.94V \quad \text{(DC)}$$

$$V_2 = \left(\frac{(21.962-j41.399)}{(21.962-j41.399)+(30+j377)}\right) 4.949V_{pp} = 0.683V_{pp} \quad \text{(AC - just use the magnitude)}$$

6) Determine R, C1, and C2 so that

- The DC current through R is 200mA
- The ripple at V1 is 3Vpp and
- The ripple at V2 = 0.2Vpp

C1	C2	R
1111uF	**102uF**	**59 Ohms**

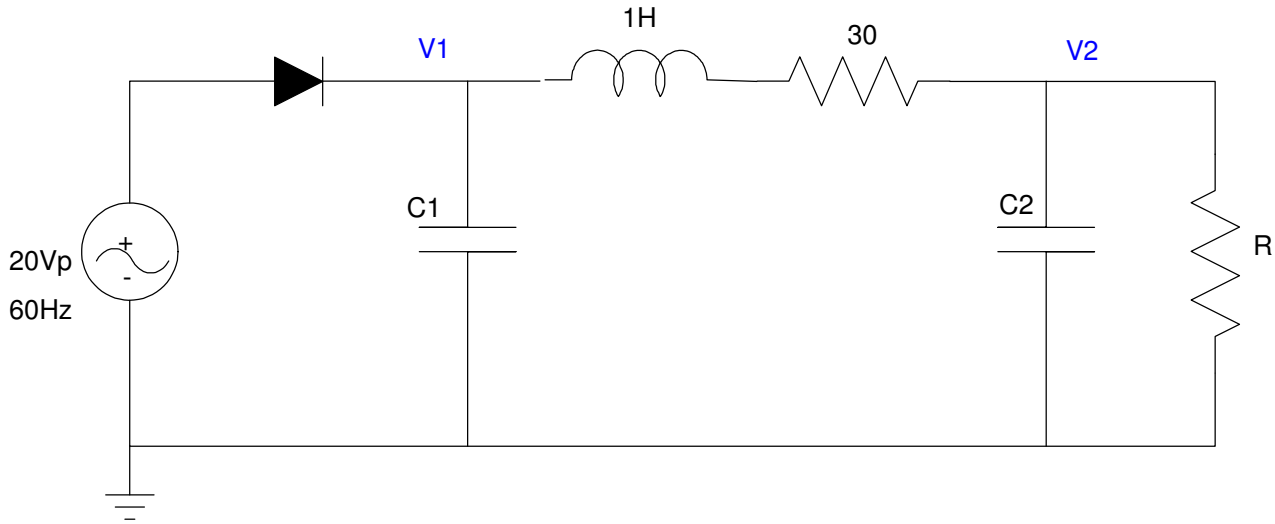

$$V_1(DC) = 19.3V - \tfrac{1}{2} \cdot 3V_{pp} = 17.8V$$

$$I = 200mA = \left(\frac{17.8V}{R+30}\right)$$

$$R = 59\Omega$$

$$I = C_1 \frac{dV}{dt}$$

$$200mA = C_1 \cdot \frac{3V_{pp}}{1/60s}$$

$$C_1 = 1111\mu F$$

Assume C2 = 0

$$V_2 = \left(\frac{1000}{1000+30+j377}\right) 3V_{pp} = 0.4569V_{pp}$$

To make the ripple 0.200Vpp

$$\left|\frac{1}{j\omega C_2}\right| = \left(\frac{0.2V}{0.4569V}\right) \cdot 59\Omega = 25\Omega$$

$$C_2 = 102\mu F$$

Bernie Sanders Bonus! Bernie Sanders and Quicksilver (of the X-men) leave Iowa to go to New Hampshire. Bernie flies an SR-71 (the world's fastest airplane) at 6 times the speed of sound. Quicksilver runs. Who gets to New Hampshire first?

answer: Quicksilver (approx 1 million mph)

SR71: Mach-6 (3600 mph)