ECE 320 - Quiz #4 - Name _____

Max/Min, Clipper Circuits, Transistors. February 14, 2020

Max/Min Analysis

1) Determine the currents. Assume ideal silicon diodes (Vf = 0.7V)

I1	I2	I3	I4	I5	I6
8.3 mA	**0**	**0**	**0.3mA**	**6.0mA**	**0**

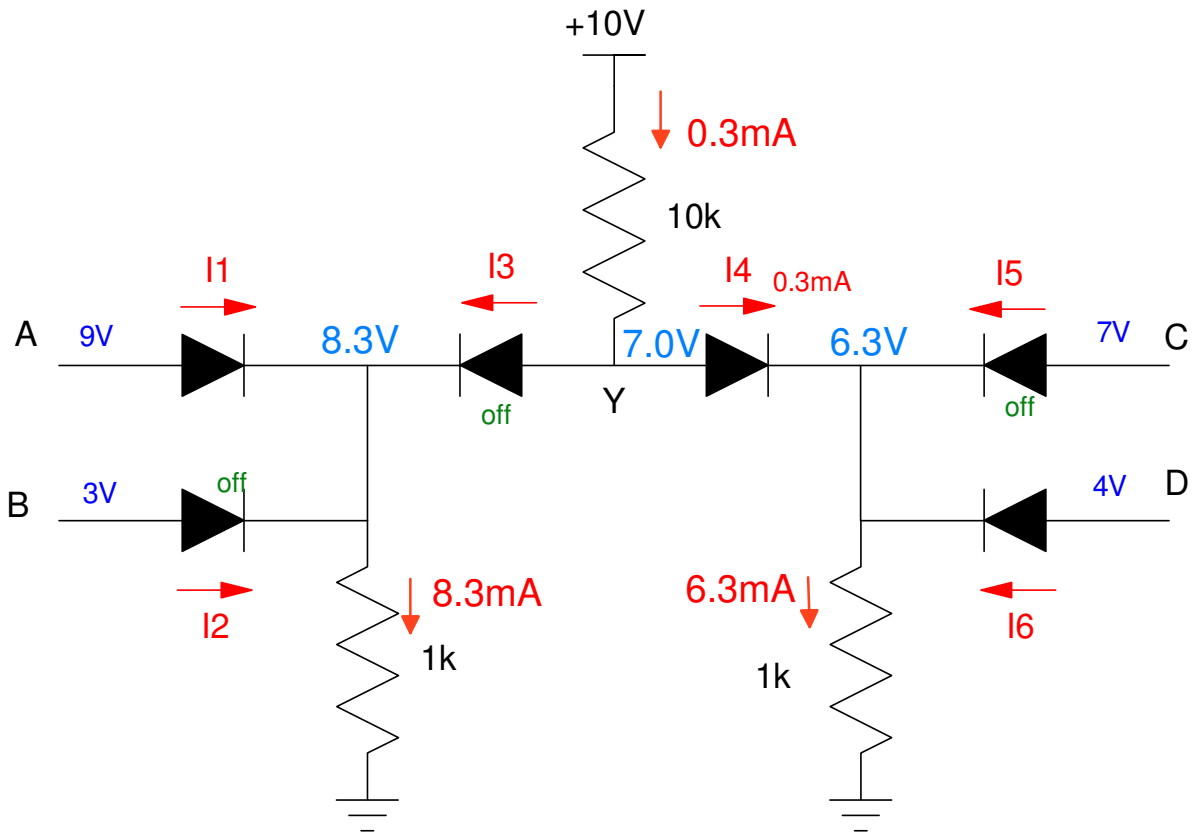

Max / Min Design

2) Design a circuit to implement the function

$$Y = AB + CDE = \max(\min(A, B), \min(C, D, E))$$

Assume all voltages are in the range of (0V, 10V) analog.

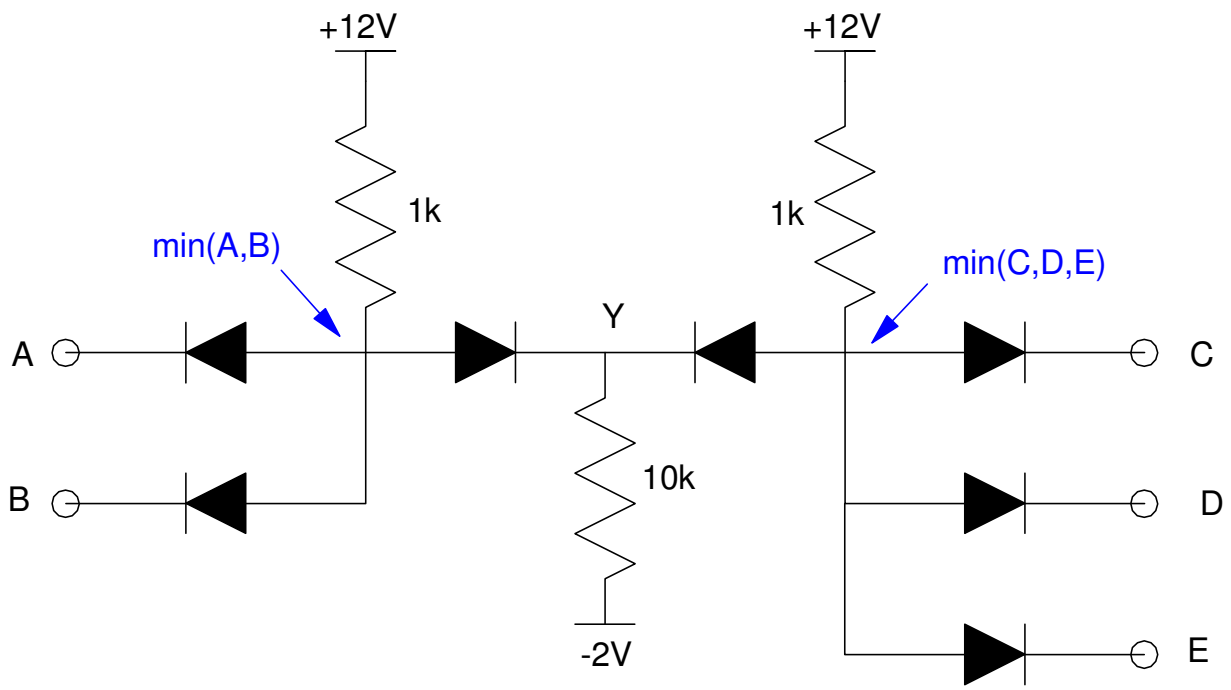

Clipper Circuit: Design

3) Design a clipper circuit to implement the following function the best you can using two zener diodes:

R1	R2	Vz2	R3	Vz3
1667	**1000**	**8V**	**300**	**12V**

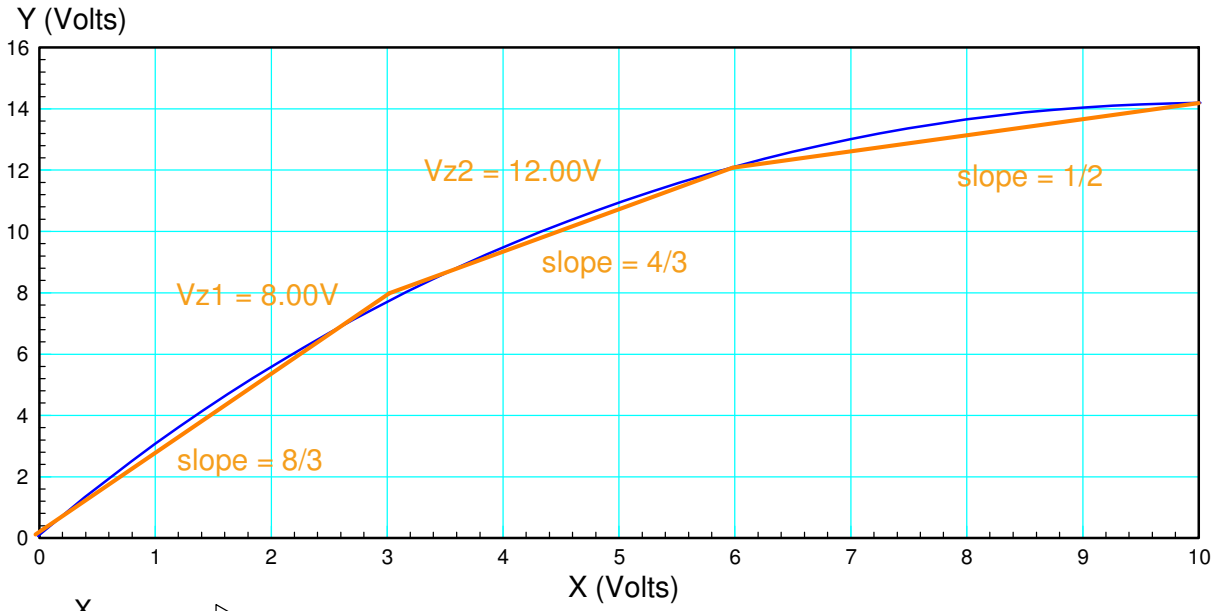

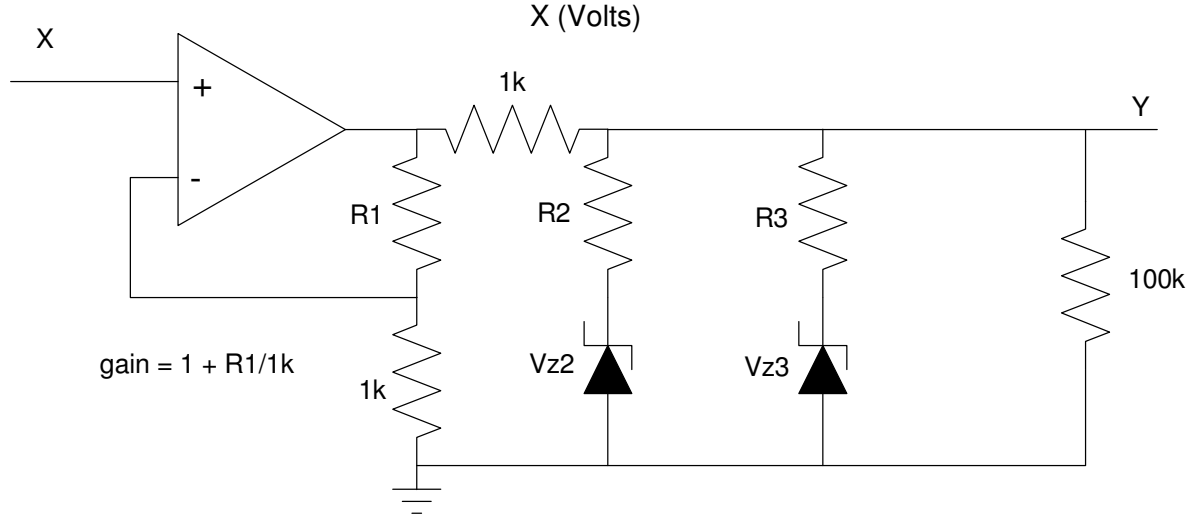

$$1 + \frac{R_1}{1000} = 8/3 \qquad \Rightarrow R_1 = 1667$$

$$\left(\frac{R_2}{R_2+1000}\right) \cdot \frac{8}{3} = \frac{4}{3} \qquad \Rightarrow R_2 = 1000$$

$$\left(\frac{R_x}{R_x+1000}\right) \cdot \frac{8}{3} = \frac{1}{2} \qquad \Rightarrow R_x = 230\Omega = R_2 || R_3$$

$$R_3 = 300$$

Clipper Circuit: Design

4) Design a circuit to clip the input voltage at +8V and -3V

$$Y = \begin{cases} +8V & x > 8V \\ x & -3V < x < 8V \\ -3V & x < -3V \end{cases}$$

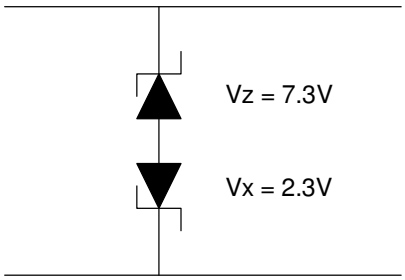

Transistor Theory

5) The VI characteristics for an NPN transistor are shown below. Determine the current gain, beta, and label off / active / saturated regions

Current Gain (beta)	Off Region	Active Region	Saturated Region
200	show on graph	show on graph	show on graph

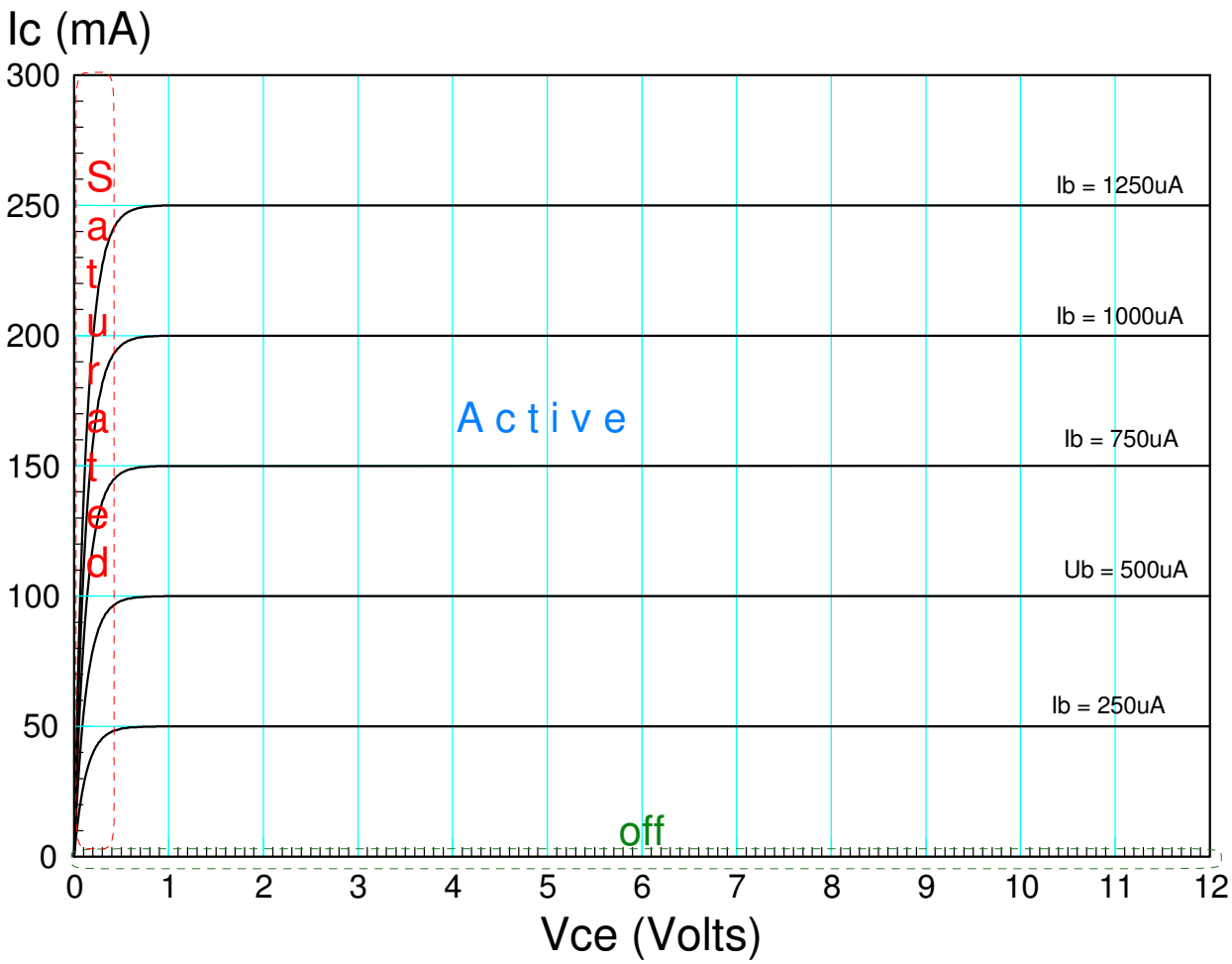

Transistor Load Line

6) Draw the load line for the following transistor circuit. Also label the operating points when X = {0V, 5V, 10V}

Load Line	Operating Point Vin = 0V	Operating Point Vin = 5.0V	Operating Point Vin = 10.0V
show on graph	Vce = 9.0V Ic = 0mA	Vce = 3.84V Ic = 115mA	Vce = 0.2V Ic = 196mA

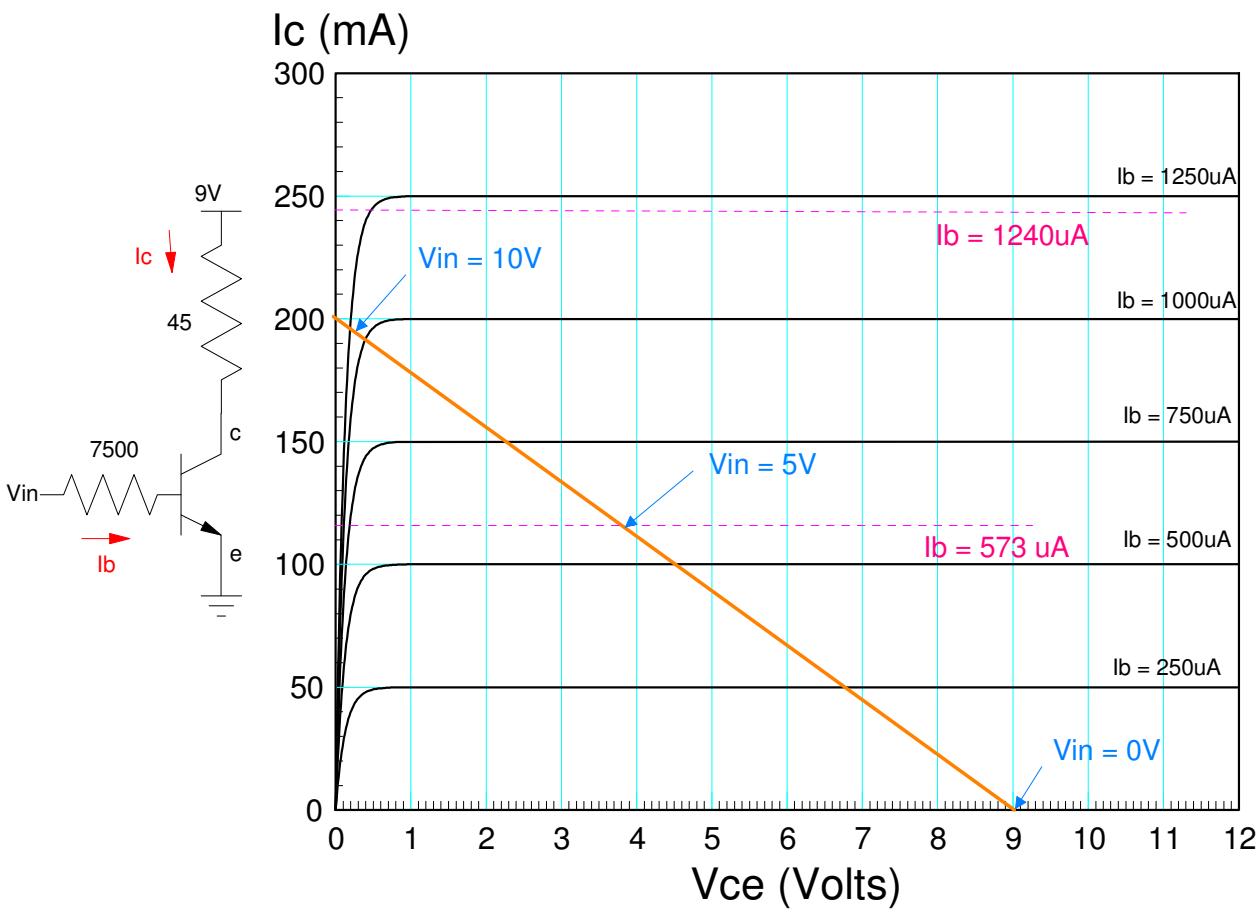

Vin = 0V: Ib = 0

Vin = 5V: $I_b = \left(\frac{5V - 0.7V}{7500}\right) = 573\mu A$

Vin = 10V: $I_b = \left(\frac{10V - 0.7V}{7500}\right) = 1240\mu A$

Valentine's Day Bonus: The following functions are for a conchoid, butterfly, another butterfly, and a heart. Which one draws a heart? **answer = a)**

a) $\boxed{r = \frac{\sin(t)\sqrt{|\cos(t)|}}{\sin(t)+1.4} - 2\sin(t) + 2}$ b) $r = \cos^2(5\theta) + \sin(3\theta) + 0.3$ c) $r = \exp(\sin(t)) - 2\cos(4t) - 0.416\cos(t)$

d) $x(t) = 11\cos(t) - 6\cos(11t/6)$ $y(t) = 11\sin(t) - 6\sin(11t/6)$