ECE 320 - Quiz #5 - Name _____

Transistors, H-Bridges, Schmitt Triggers, Buck Converters. February 27, 2020

Transistor Switch

Determine Rb and Rc so that a function generator can turn on and off a 5W LED at 1.00A. Assume

- LED: Vf = 3.0V @ 1.67A
- Transistor: Vbe = 1.4V, Vce = 0.9V, β=1000 (TIP112)
- Input: 0V / 5V binary, capable of up to 20mA

Min value for Rb	Max value of Rb	Rc
180 Ohms	**3600 Ohms**	**6.1 Ohms**

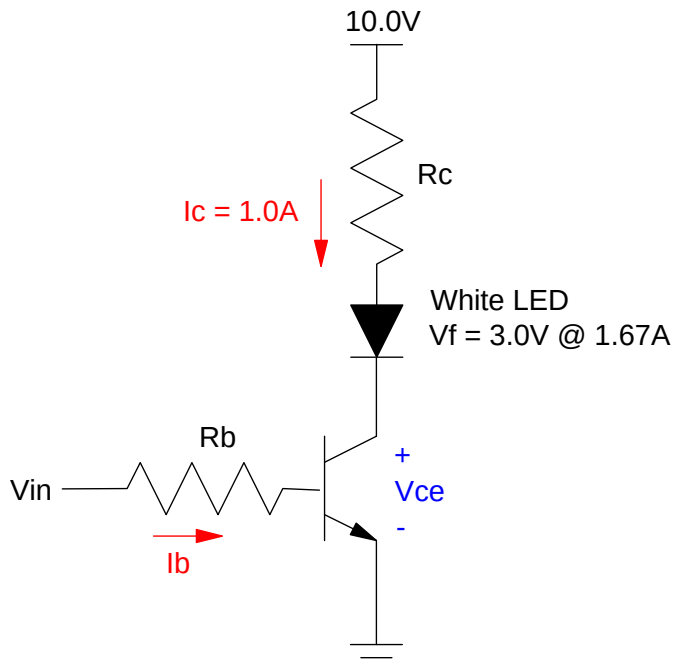

Rc:

$$R_c = \left(\frac{10V - 3V - 0.9V}{1A}\right) = 6.1\Omega$$

Rb: 1mA < Ib < 20mA

$$\beta I_b > I_c = 1A$$

$$I_b > 1mA$$

$$R_b = \left(\frac{5V - 1.4V}{1mA}\right) = 3600\Omega \qquad \textit{upper limit}$$

$$R_b = \left(\frac{5V - 1.4V}{20mA}\right) = 180\Omega \qquad \textit{lower limit}$$

H-Bridge (analysis)

2) Determine the voltags and currents for the following H-bridge. Assume TIP transistors:

- | Vbe | = 1.4V
- | Vce | = 0.9V when saturated
- β = 1000

I1	I2	I3	V1	V2
86 uA	**43 mA**	**43 uA**	**9.1 V**	**8.24 V**

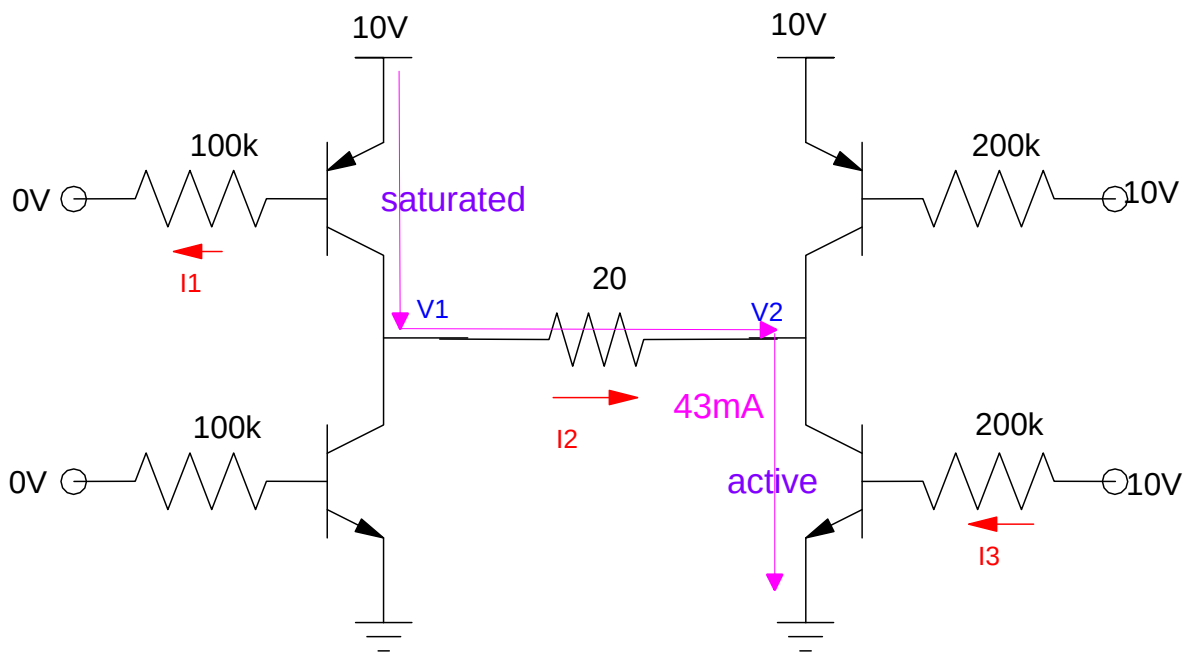

$$I_1 = \left(\frac{10-1.4}{100k}\right) = 86\mu A \qquad \left(\frac{10V-0.9V-0.9V}{20}\right) = 410mA \qquad I_3 = \left(\frac{10-1.4}{200k}\right) = 43\mu A$$

$$\beta I_1 = 86mA \qquad \beta I_3 = 43mA$$

smallest current wins (43mA)

This means T1 is saturated (Vce = 0.9V) and T4 is active (0.9V < Vce < 9.1V)

$$V_1 = 10 - 0.9 = 9.1V$$

$$V_2 = V_1 - 43mA \cdot 20\Omega$$

H-Bridge (design)

3) Specify R1 and R2 so that the following H-bridge has transistors which are either off or saturated. For these values of R1 and R2, determine the currents. Assume

- | Vbe | = 1.4V
- | Vce | = 0.9V when saturated
- β = 1000
- I1 and I3 can be 20mA (or less)

R1	R2	I1	I2	I3
8.6k	**8.6k**	**1mA**	**410mA**	**1mA**

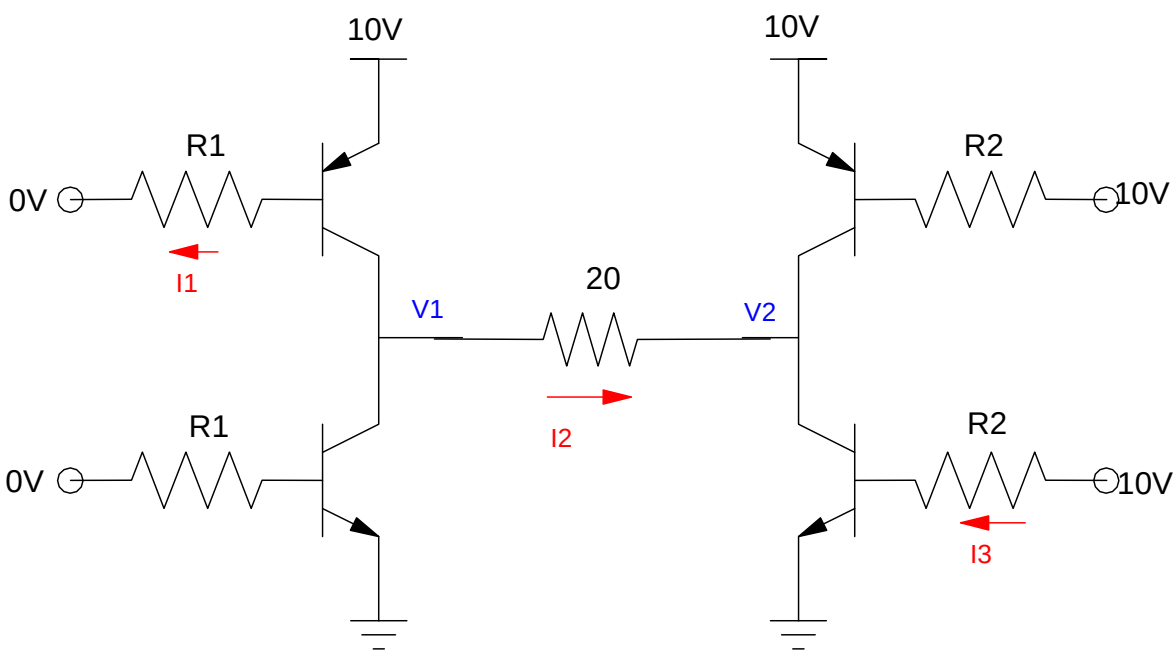

Ideally, all transistors are either off or saturated

$$I_2 = \left(\frac{10-0.9-0.9}{20}\right) = 410mA$$

To saturate the transistors

$$\beta I_b > I_c$$

$$I_b > 410\mu A$$

Pick a current in the range of

410 uA < Ib < 20mA

Let Ib = 1mA

$$R_1 = \left(\frac{10V-1.4V}{1mA}\right) = 8.6k\Omega$$

ditto for R2

Schmitt Trigger (design)

4) Design a Schmitt Trigger so that the output (Y) is

- Y = 0V when R < 4000 Ohms
- Y = 10V when R > 4500 Ohms
- No change (0V or 10V) when 4000 < R < 4500 Ohms

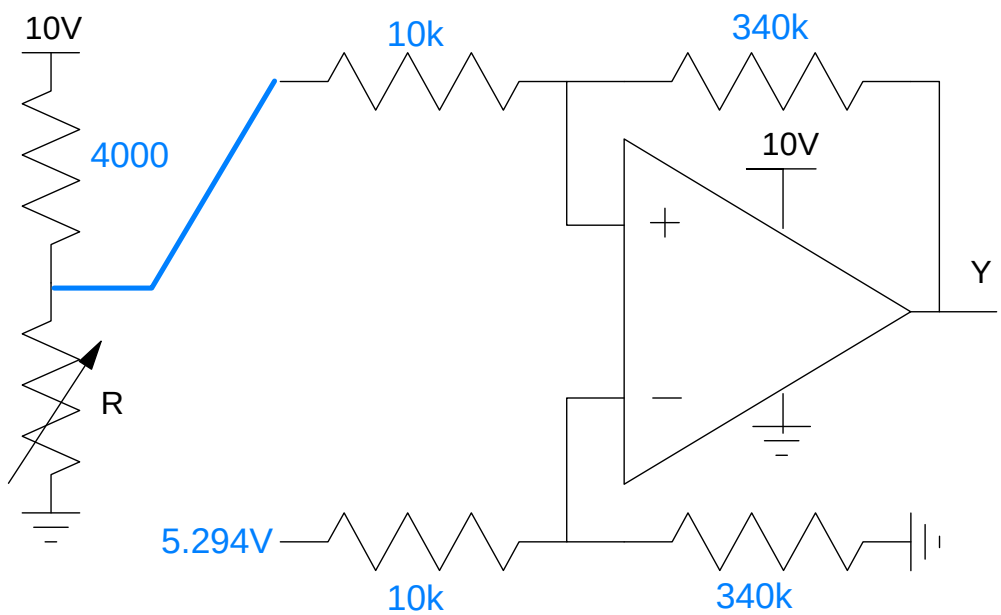

When R = 4000 (Y = 0V)

$$X = \left(\frac{4000}{4000+4000}\right) 10V = 5.00V$$

When R = 4500 (Y = 10V)

$$X = \left(\frac{4500}{4500+4000}\right) 10V = 5.294V$$

When X goes up, Y goes up. Connect to the + input

When Y = 0, you switch at X = 5.294V. Make the offset 5.294V

The gain needed is

$$gain = \left(\frac{\text{change in output}}{\text{change in input}}\right) = \left(\frac{10V-0V}{5.294V-5.000V}\right) = 34.0$$

Make the resistor ratio 34.0 : 1

Buck Converter (analysis)

5) Determine the voltages (V1 and V2, both DC and AC) for the following Buck converter (DC to DC)

V1		V2	
V1(DC)	V1(AC)	V2(DC)	V2(AC)
15.86 V	**20.7 Vpp**	**13.22 V**	**2.131 Vpp**

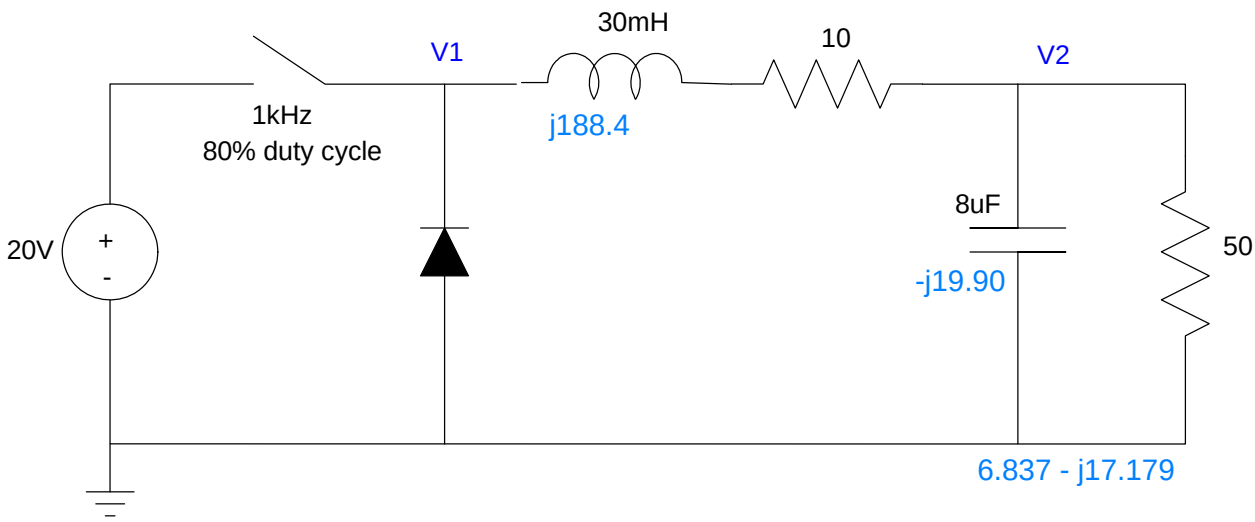

DC:

$$V_1 = (0.8)(20V) + (0.2)(-0.7V) = 15.86V$$

$$V_2 = \left(\frac{50}{50+10}\right) V_1 = 13.22V$$

AC:

$$V_1 \approx 20.7V_{pp}$$

$$V_2 = \left(\frac{(6.387-j17.179)}{(6.387-j17.179)+(10+j188.4)}\right) \cdot 20.7V_{pp}$$

$$V_2 = 2.131V_{pp}$$

take the magnitude & ignore the phase.

Buck Converter (design)

6) Design a Buck converter so that the output is 5.00V DC with a ripple of 1Vpp

DC Voltage at V1	Duty Cycle (% on)	C
6.00 V	**32.4 %**	**17.05 uF**

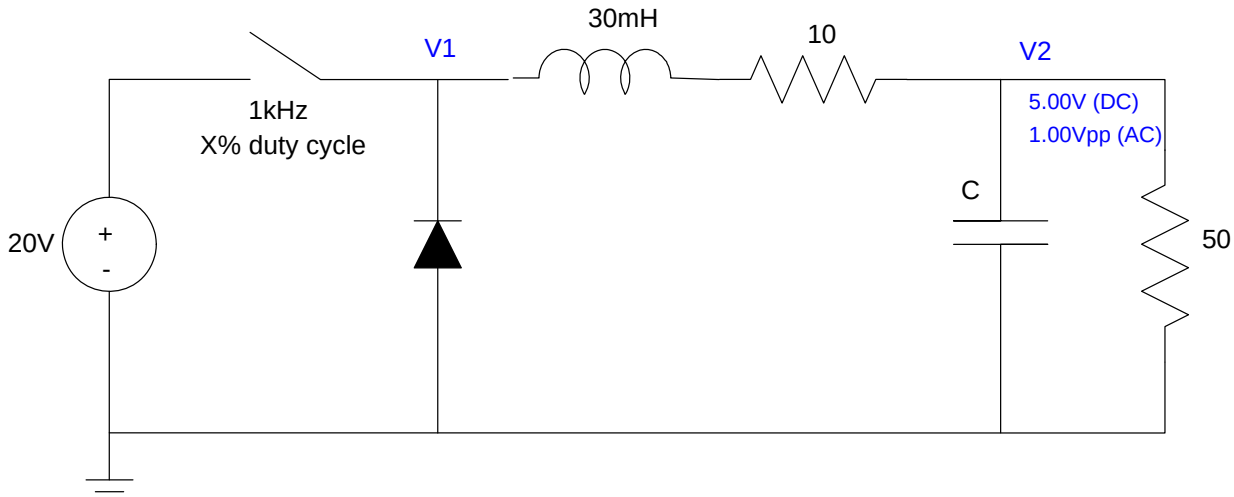

If V2 = 5.00V

$$V_1 = \left(\frac{50+10}{50}\right) V_2 = 6.00V$$

The duty cycle is

$$\alpha \cdot 20V + (1-\alpha)(-0.7V) = 6.00V$$

$$\alpha = \left(\frac{6.7V}{20.7V}\right) = 32.4\%$$

From problem #5, if C = 8uF, the ripple at V2 os 2.131Vpp

To make the ripple 1.000Vpp

$$C_2 = \left(\frac{2.131}{1.000}\right) 8\mu F = 17.05\mu F$$

Bernie Sanders Bonus!!! Whis is more

- <u>The number of votes Bernie Sanders got in the Nevada primary (6,788 votes), or</u>
- The number of voles you'll have if you start with one breeding pair and wait one year?

Bernie Votes: 6,788

Voles: 6,338