ECE 320 - Quiz #7 - Name _____

DTL Logic, TTL Logic, MOSFETs. March 12, 2020

1) Determine the voltages for the following DTL gate. Assume ideal silicon diodes (Vf = 0.7V) and transistors:

Vbe = 0.7V

- Vce(sat) = 0.2V
- β = 100

V1	V2	V3	V4

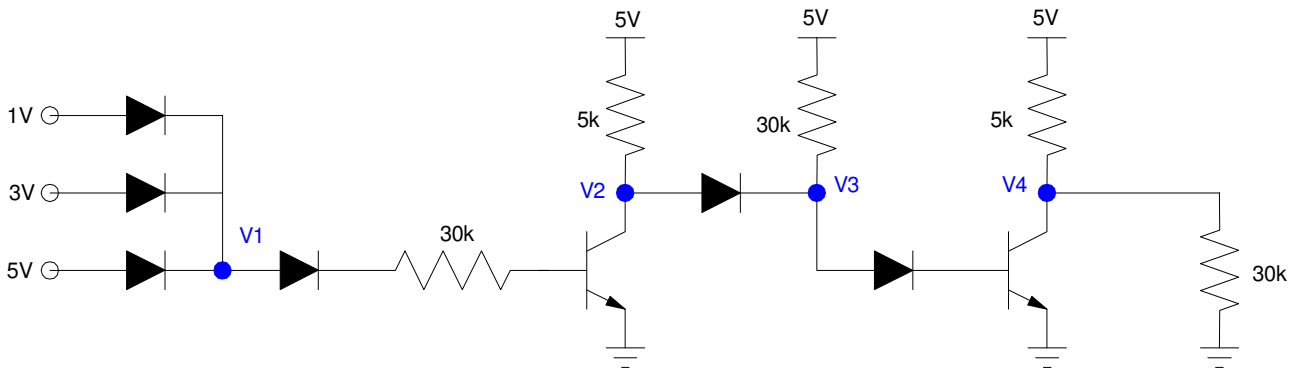

2) Determine the voltages for the following DTL gate. Assume ideal silicon diodes (Vf = 0.7V) and transistors:

- Vbe = 0.7V
- Vce(sat) = 0.2V
- β = 100

V1	V2	V3	V4

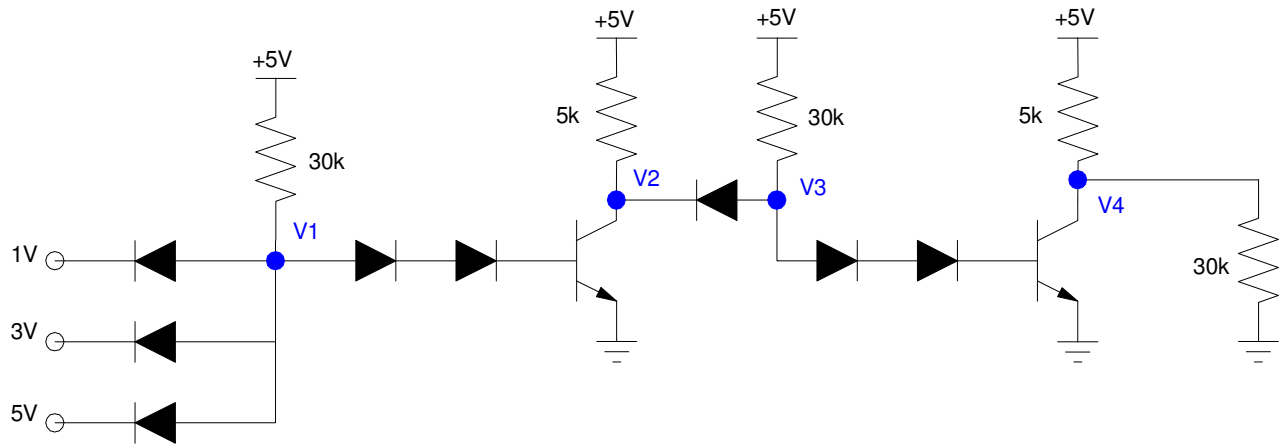

3) Determine the voltages for the following TTL gate. Assume ideal silicon diodes (Vf = 0.7V) and transistors:

- Vbe = 0.7V
- Vce(sat) = 0.2V
- β = 100 or 0.1

I1	V2	V3	V4	V5

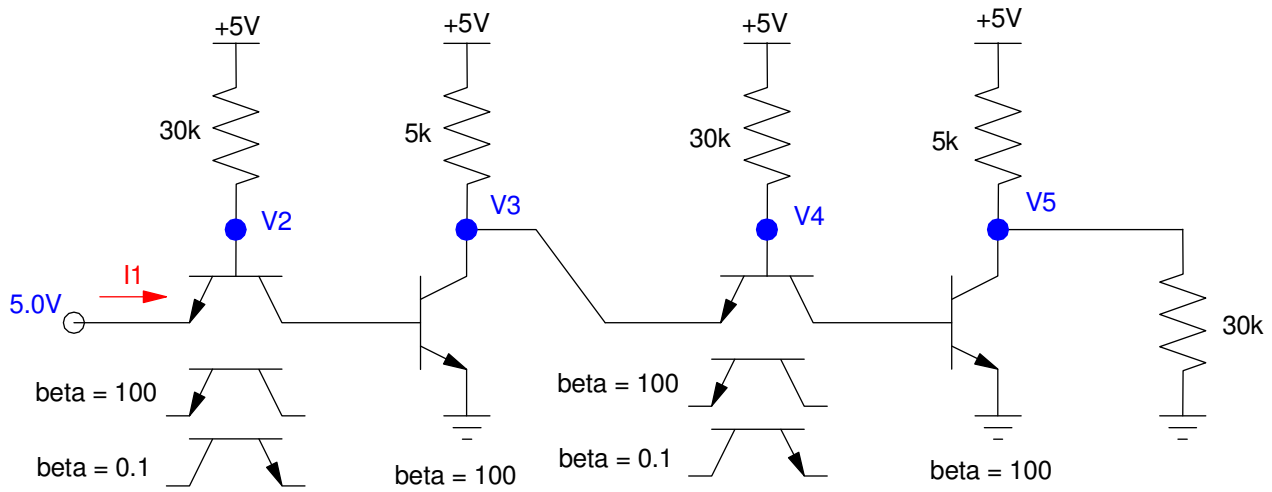

4) Determine the voltages and currents for the following open-collector circuit. Assume ideal silicon diodes (Vf = 0.7V) and transistors:

- Vbe = 0.7V
- Vce(sat) = 0.2V
- β = 100

I1	I2	I3	Vy

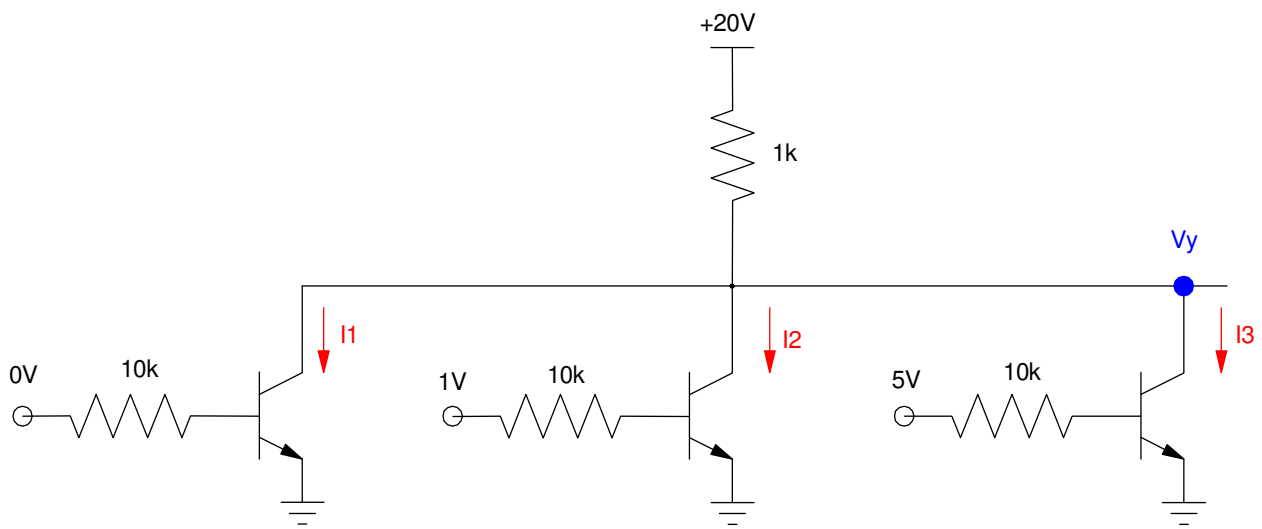

5) Determine kn and label the off / saturated / ohmic regions for the following MOSFET.

kn	Off Region	Ohmic Region	Saturated Region
	show on graph	show on graph	show on graph

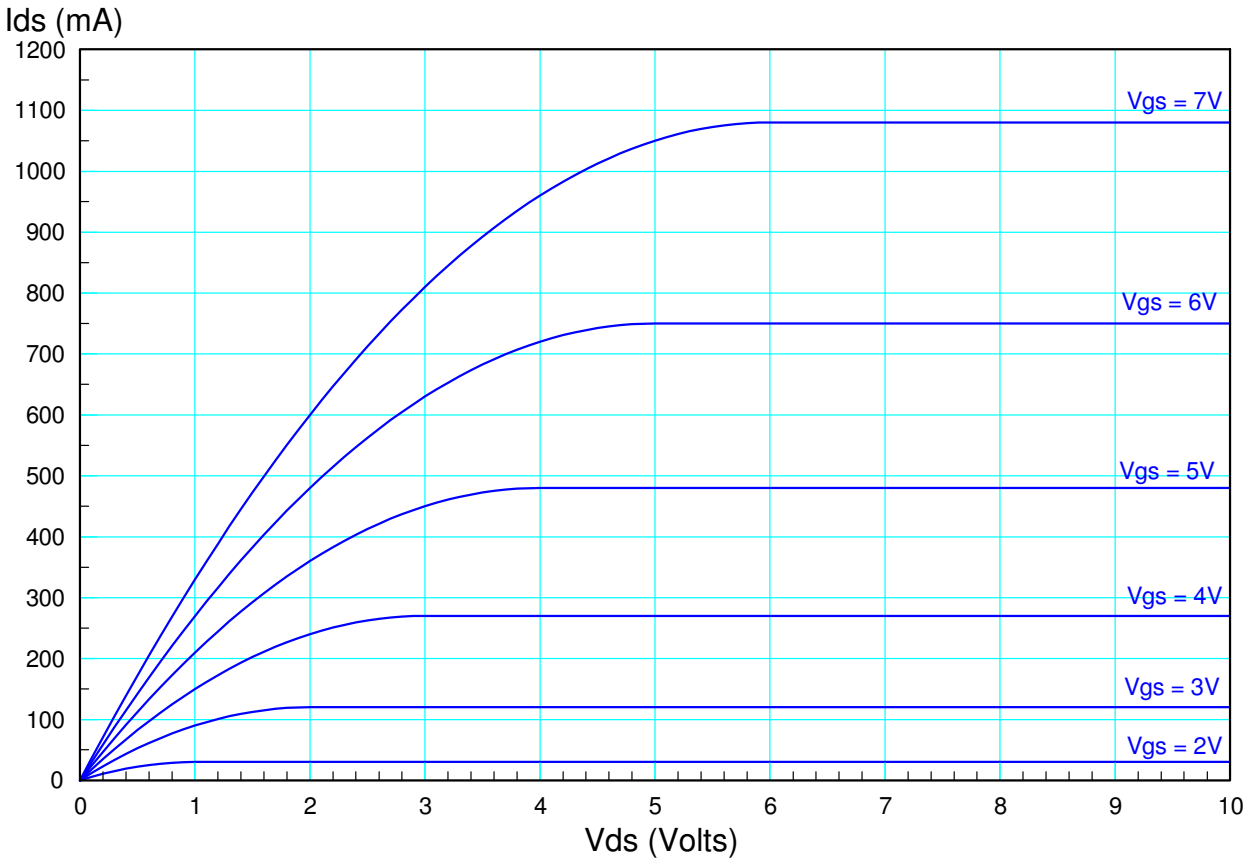

6) Draw the load-line for the following circuit and determine the q-point (Vds, Ids) for Vg = {1V, 3V, 5V}

Load Line	Vg = 2.0 V	Vg = 4.0 V	Vg = 6.0 V
show on graph	Vds =	Vds =	Vds =
	Ids =	Ids =	Ids =

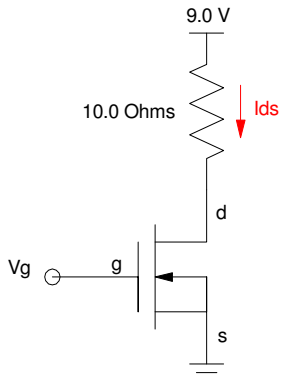

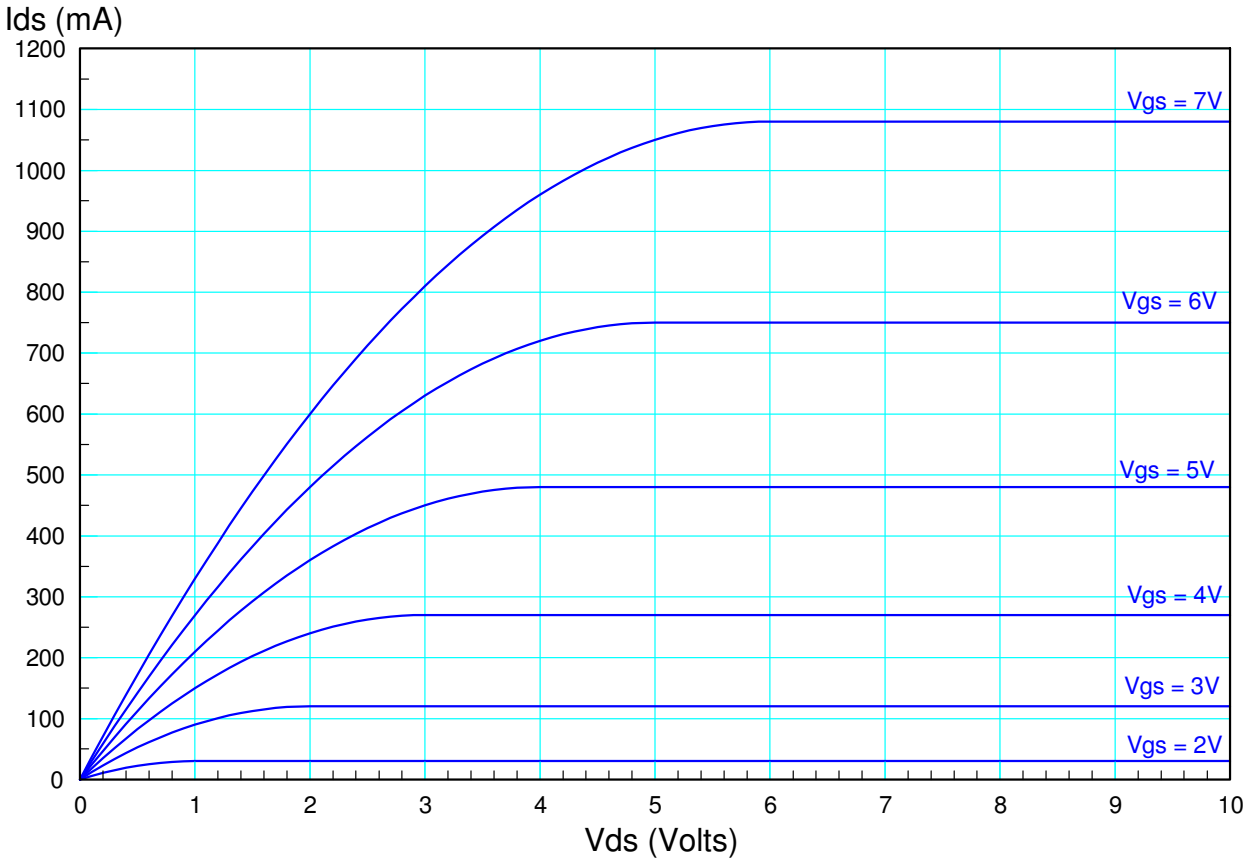

Bernie Sanders Bonus! According to the Las Vegas betting line, which is more likely to happen this year:

- The Vikings winning the Super Bowl,
- Bernie Sanders being elected President