ECE 320 - Quiz #7 - Name _____

DTL Logic, TTL Logic, MOSFETs. March 12, 2020

1) Determine the voltages for the following DTL gate. Assume ideal silicon diodes (Vf = 0.7V) and transistors: Vbe = 0.7V

- Vce(sat) = 0.2V
- β = 100

V1	V2	V3	V4
4.3 V	**0.2 V**	**1.4 V**	**0.2 V**

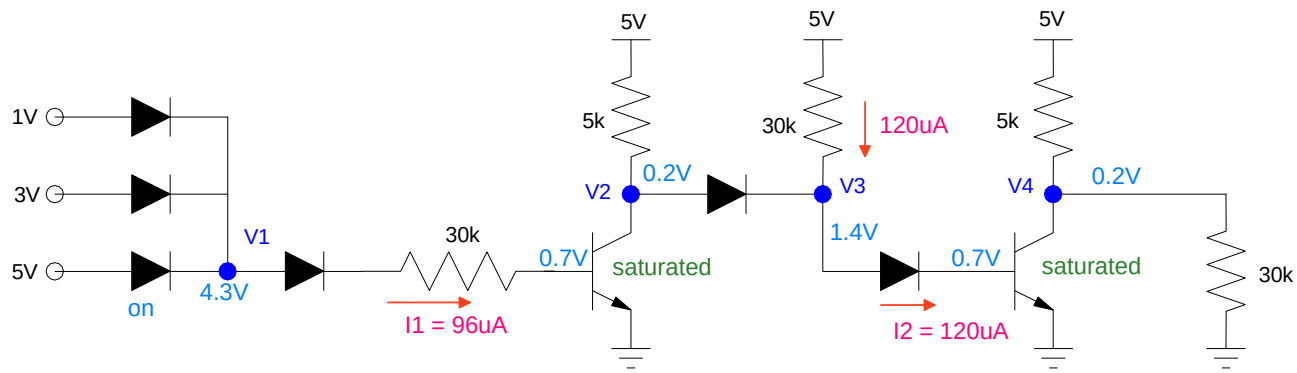

$$I_1 = \left(\frac{5V - 2.1V}{30k}\right) = 96\mu A$$

2) Determine the voltages for the following DTL gate. Assume ideal silicon diodes (Vf = 0.7V) and transistors:

- Vbe = 0.7V
- Vce(sat) = 0.2V
- β = 100

V1	V2	V3	V4
1.7 V	**5.0 V**	**2.1 V**	**0.2 V**

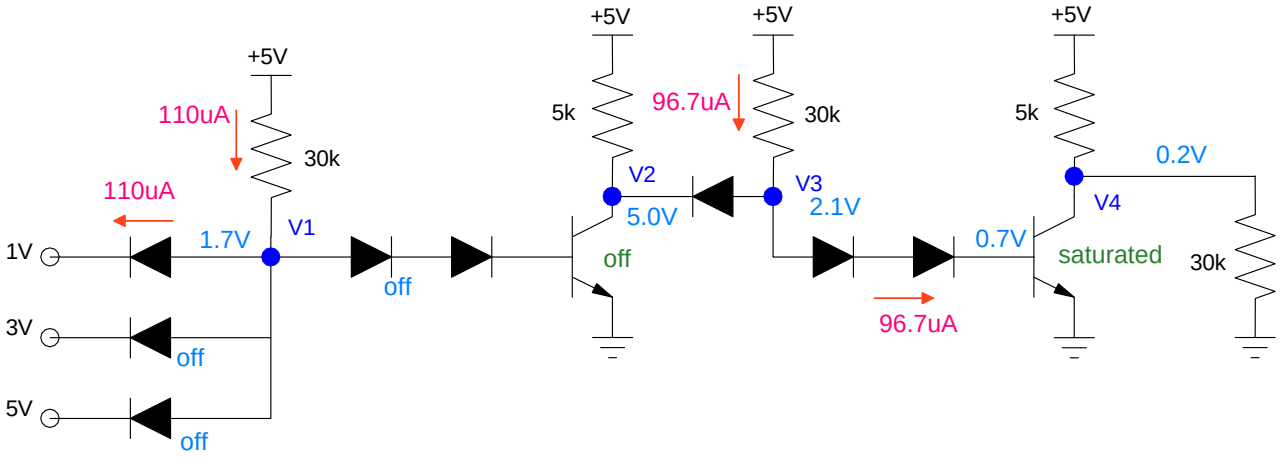

3) Determine the voltages for the following TTL gate. Assume ideal silicon diodes (Vf = 0.7V) and transistors:

- Vbe = 0.7V
- Vce(sat) = 0.2V
- β = 100 or 0.1

I1	V2	V3	V4	V5
12 uA	**1.40 V**	**0.20 V**	**0.90 V**	**4.286 V**

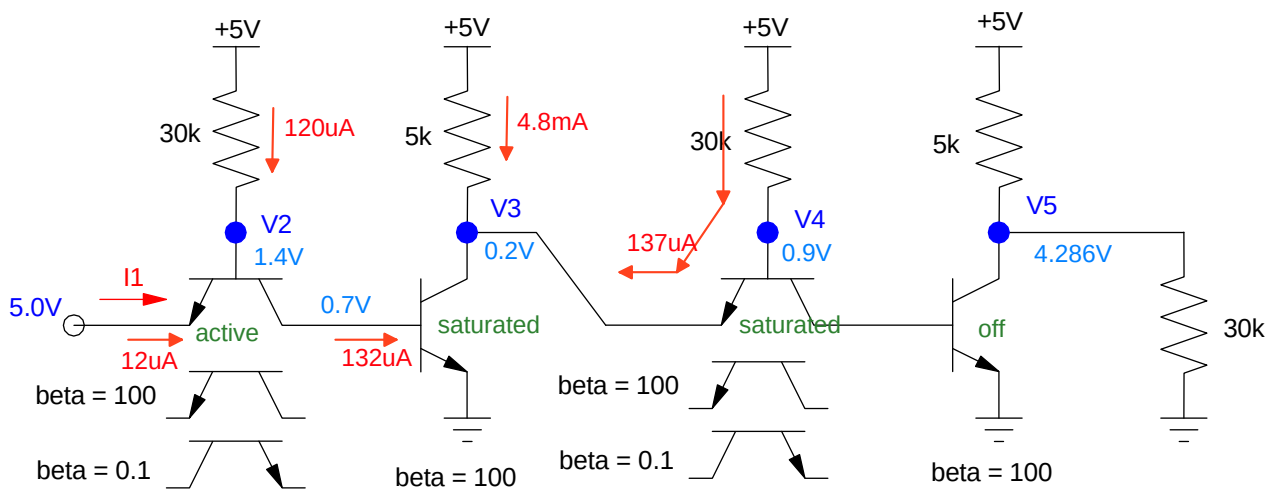

$$V_5 = \left(\frac{30k}{30k+5k}\right)5V = 4.286V$$

4) Determine the voltages and currents for the following open-collector circuit. Assume ideal silicon diodes (Vf = 0.7V) and transistors:

- Vbe = 0.7V
- Vce(sat) = 0.2V
- β = 100

I1	I2	I3	Vy
0 mA	**3.0 mA**	**16.8 mA**	**0.2 V**

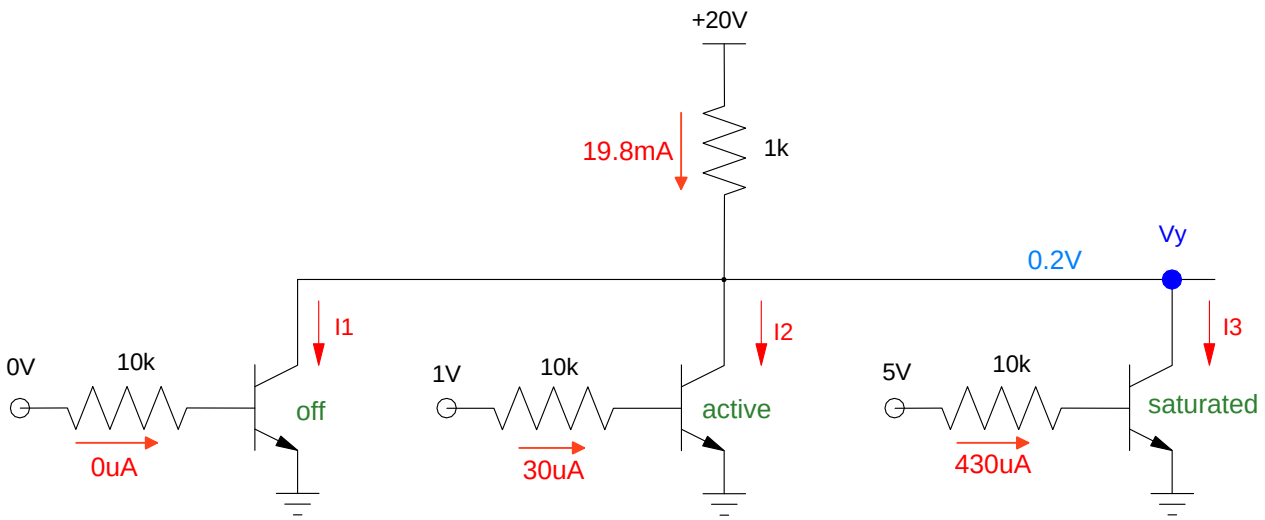

$$I_2 = \beta I_b = 3.0mA$$

$$I_3 + I_2 = 19.8mA$$

$$I_3 = 16.8mA$$

5) Determine kn and label the off / saturated / ohmic regions for the following MOSFET.

kn	Off Region	Ohmic Region	Saturated Region
0.06 V/A²	show on graph	show on graph	show on graph

- Saturated Region: $I_{ds} = \frac{k_n}{2}(V_{gs} - V_{th})^2$ *Vth = 1.0V*
- Ohmic Region: $I_{ds} = k_n\left(V_{gs} - V_{th} - \frac{V_{ds}}{2}\right)V_{ds}$

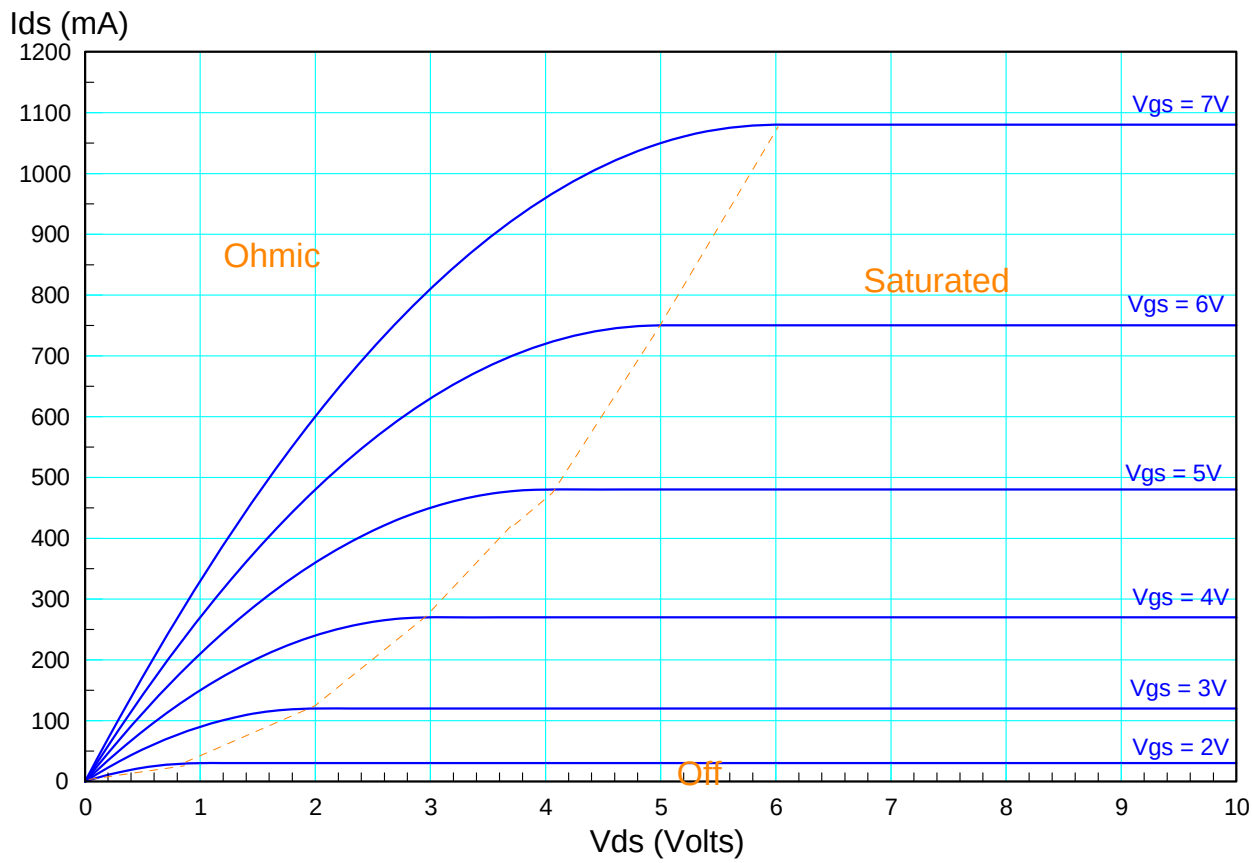

Pick a point: Vds = 9.0V, Vgs = 7.0V, Ids = 1080mA

Saturated Region:

$$I_{ds} = \frac{k_n}{2}(V_{gs} - V_{th})^2$$

$$1.080A = \frac{k_n}{2}(7V - 1V)^2$$

$$k_n = 0.060\ \frac{A}{V^2}$$

6) Draw the load-line for the following circuit and determine the q-point (Vds, Ids) for Vg = {1V, 3V, 5V}

Load Line	Vg = 2.0 V	Vg = 4.0 V	Vg = 6.0 V
show on graph	Vds = 8.7 V	Vds = 6.4 V	Vds = 2.8 V
	Ids = 30mA	Ids = 260 mA	Ids = 620mA

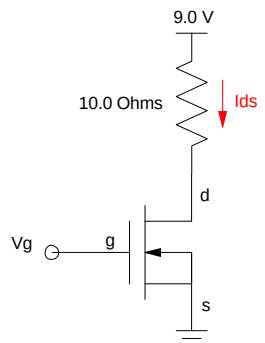

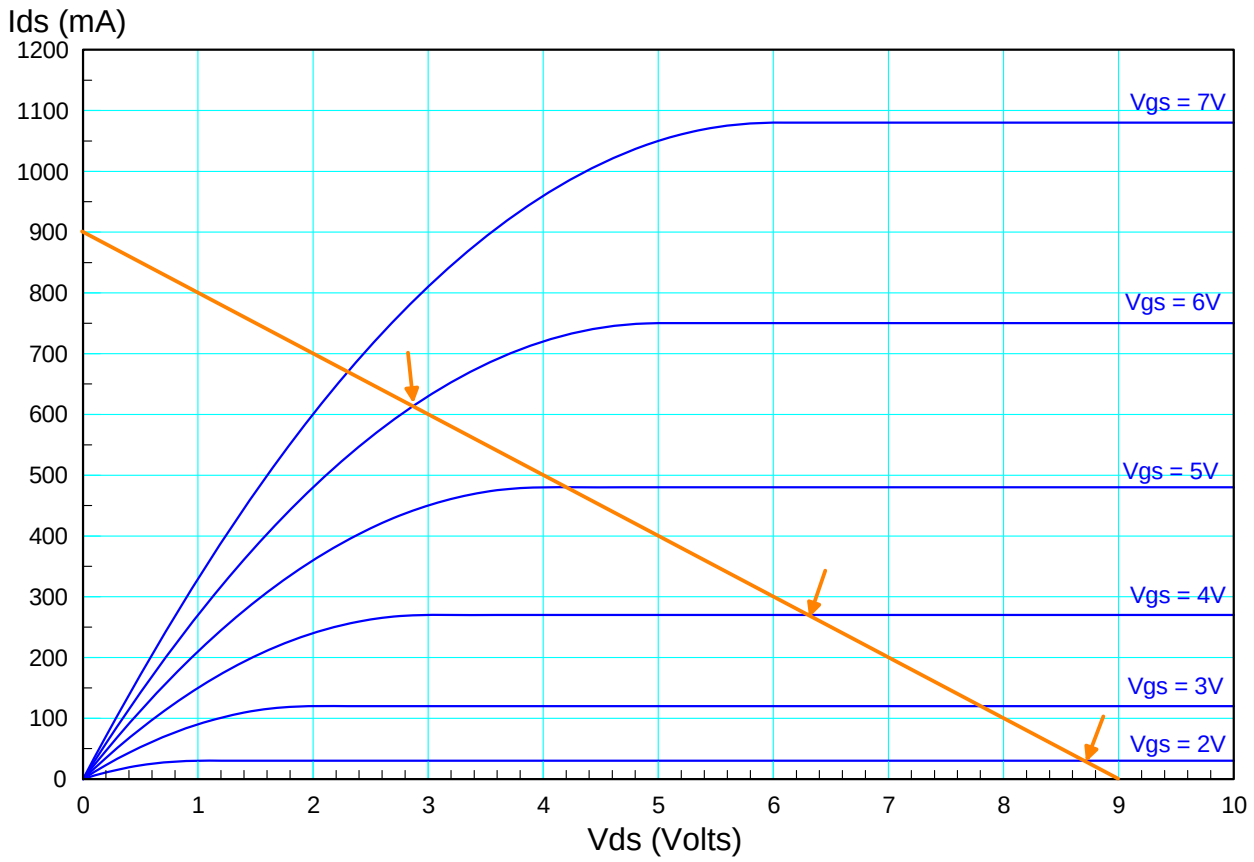

Bernie Sanders Bonus! According to the Las Vegas betting line, which is more likely to happen this year:

- The Vikings winning the Super Bowl: 14:1 odds
- Having a killing frost in June in Fargo (temperature drops below 30F) 156:1 odds (t-score = 2.55)
- Bernie Sanders being elected President: 14:1 odds