ECE 320 - Homework #1

EE 206 Review, Phasors. Due Wednesday, January 22nd

Resistors in series and parallel

1) Assume X = infinity (DC analysis). Determine the resistance Rab

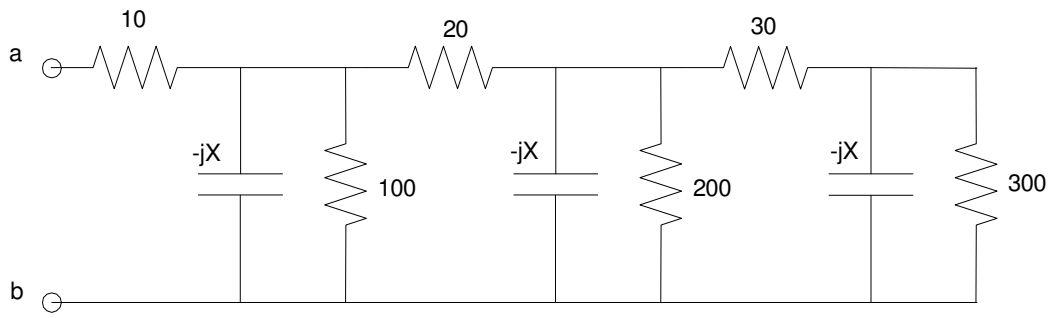

Goint right to left...

300 + 30 = 330

330 || 200 = 124.528

124.528 + 20 = 144.528

144.528 || 100 = 59.105

59.105 + 10 = 69.105

answer: **69.205 Ohms**

2) Assume -jX = -j100. Determine the resistance Rab (it will be a complex number)

Goint right to left

300 || -j100 = 30 - j90

(30 - j90) + 30 = 60 - j90

(60 - j90) || 200 || -j100 = 24.370 - j42.571

(24.370 - j42.571) + 20 = 44.370 - j42.571

(44.370 - j42.571) || 100 || -j100 = 23.513 - j22.999

(23.513 - j22.999) + 10 = 33.513 - j22.999

answer: **33.513 - j22.999 Ohms**

Voltage Nodes & Current Loops

3) (Voltage Nodes): For the following circuit

Write the voltage node equations (sum the current to zero at each node)

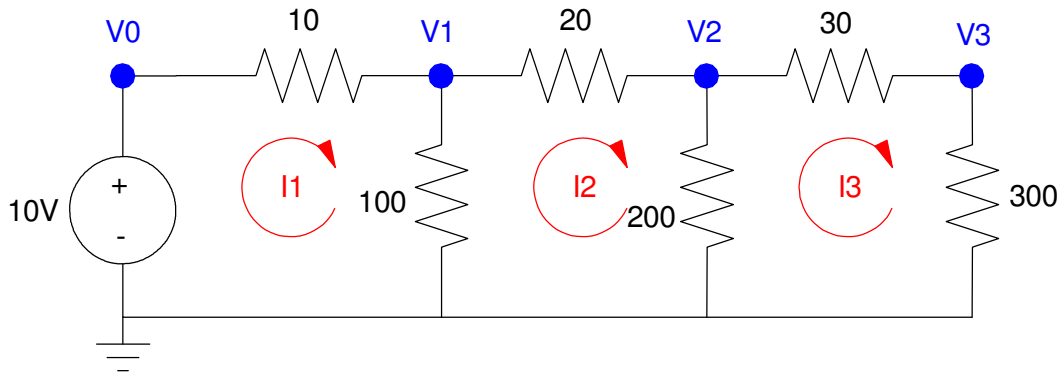

$$V_0 = 10$$

$$\left(\frac{V_1 - V_0}{10}\right) + \left(\frac{V_1}{100}\right) + \left(\frac{V_1 - V_2}{20}\right) = 0$$

$$\left(\frac{V_2 - V_1}{20}\right) + \left(\frac{V_2}{200}\right) + \left(\frac{V_2 - V_3}{30}\right) = 0$$

$$\left(\frac{V_3 - V_2}{30}\right) + \left(\frac{V_3}{300}\right) = 0$$

Group terms

$$\left(\frac{1}{10} + \frac{1}{100} + \frac{1}{20}\right) V_1 - \left(\frac{1}{20}\right) V_2 = \left(\frac{1}{10}\right) V_0$$

$$\left(\frac{-1}{20}\right) V_1 + \left(\frac{1}{20} + \frac{1}{200} + \frac{1}{30}\right) V_2 + \left(\frac{-1}{30}\right) V_3 = 0$$

$$\left(\frac{-1}{30}\right) V_2 + \left(\frac{1}{30} + \frac{1}{300}\right) V_3 = 0$$

Place in matrix form

$$\begin{bmatrix} \left(\frac{1}{10} + \frac{1}{100} + \frac{1}{20}\right) & \left(\frac{-1}{20}\right) & 0 \\ \left(\frac{-1}{20}\right) & \left(\frac{1}{20} + \frac{1}{200} + \frac{1}{30}\right) & \left(\frac{-1}{30}\right) \\ 0 & \left(\frac{-1}{30}\right) & \left(\frac{1}{30} + \frac{1}{300}\right) \end{bmatrix} \begin{bmatrix} V_1 \\ V_2 \\ V_3 \end{bmatrix} = \begin{bmatrix} \left(\frac{1}{10}\right) \\ 0 \\ 0 \end{bmatrix} V_0$$

Solve using Matlab (or similar program)

```
A = [1/10+1/100+1/20, -1/20, 0 ; -1/20, 1/20+1/200+1/30, -1/30 ; 0,-1/30,1/30+1/300]

    0.16   - 0.05          0.
  - 0.05     0.0883333   - 0.0333333
    0.     - 0.0333333     0.0366667

B = [1/10;0;0]

    0.1
    0.
    0.

V = inv(A)*B*10

    8.5529254
    7.3693613
    6.6994194
```

Check your answers in PartSim (or similar circuit simulator)

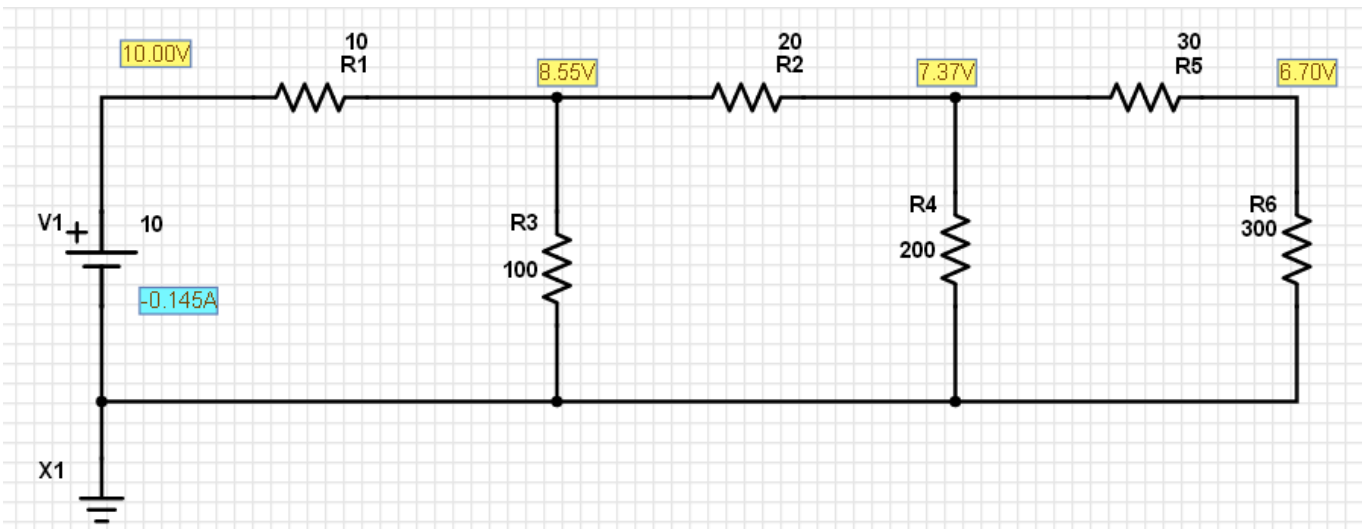

The voltages match...

4) (Current Loops) For the following circuit

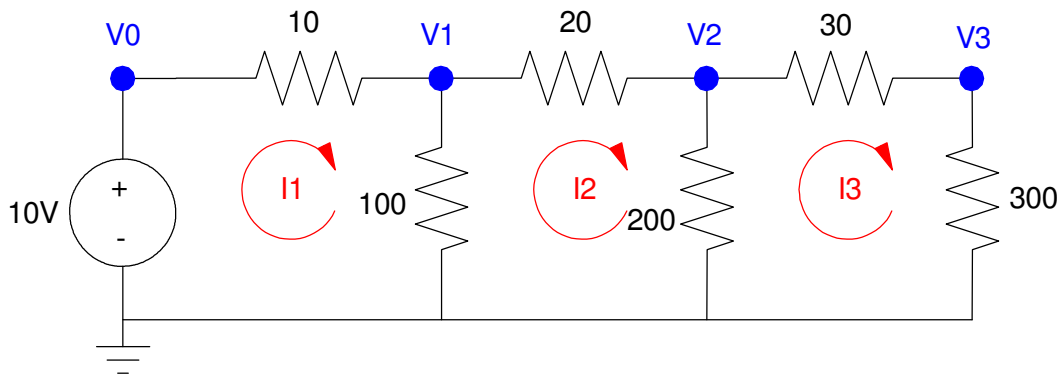

Write the current loop equations (the sum of the voltages around any closed path must sum to zero)

$$-100 + 10I_1 + 100(I_1 - I_2) = 0$$

$$100(I_2 - I_1) + 20I_2 + 200(I_2 - I_3) = 0$$

$$200(I_2 - I_3) + 30I_3 + 300I_3 = 0$$

Group terms

$$110I_1 - 100I_2 = 100$$

$$-100I_1 + 320I_2 - 200I_3 = 0$$

$$-200I_2 + 530I_3 = 0$$

Place in matrix form

$$\begin{bmatrix} 110 & -100 & 0 \\ -100 & 320 & -200 \\ 0 & -200 & 530 \end{bmatrix} \begin{bmatrix} I_1 \\ I_2 \\ I_3 \end{bmatrix} = \begin{bmatrix} 100 \\ 0 \\ 0 \end{bmatrix}$$

Solve using Matlab (or similar program)

```
A = [ 110,-100,0 ; -100,320,-200 ; 0,-200,530 ]

    110.   - 100.     0.
  - 100.     320.   - 200.
    0.     - 200.     530.

B = [10 ; 0 ; 0]

    10.
    0.
    0.
```

```
I = inv(A)*B

    0.1447075
    0.0591782
    0.0223314
```

This matches PartSim's answer

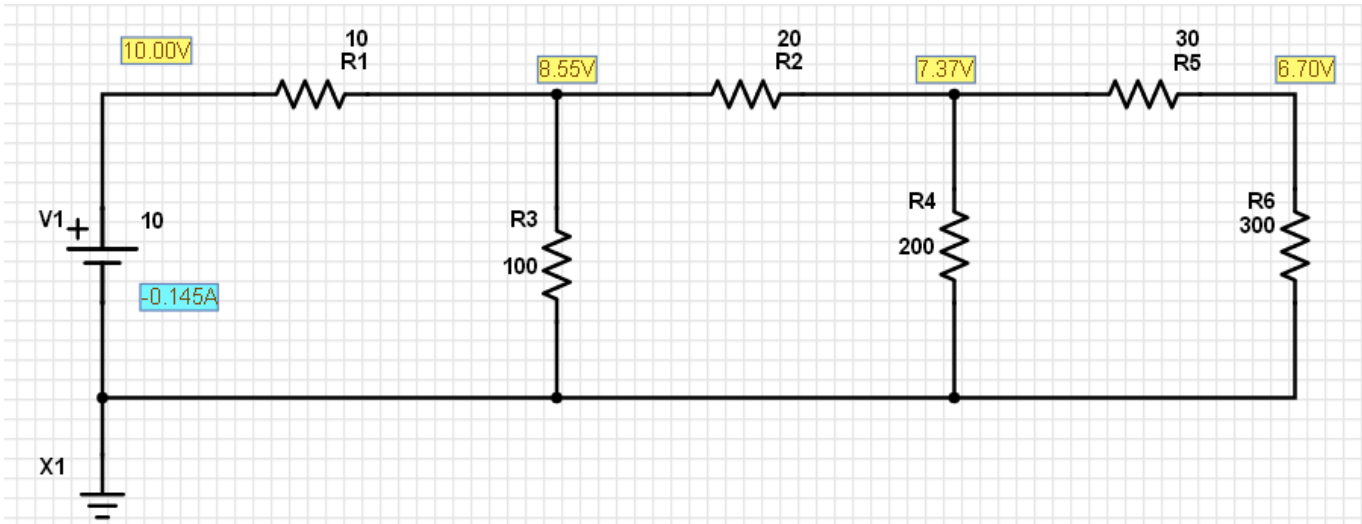

$$I_1 = \left(\frac{1-8.55}{10}\right) = 0.145 \quad \text{vs. } 0.1447074$$

$$I_2 = \left(\frac{8.55-7.37}{20}\right) = 0.059 \quad \text{vs. } 0.0591782$$

$$I_3 = \left(\frac{6.70}{300}\right) = 0.022 \quad \text{vs. } 0.0223314$$

5) (Voltage Nodes): For the following circuit

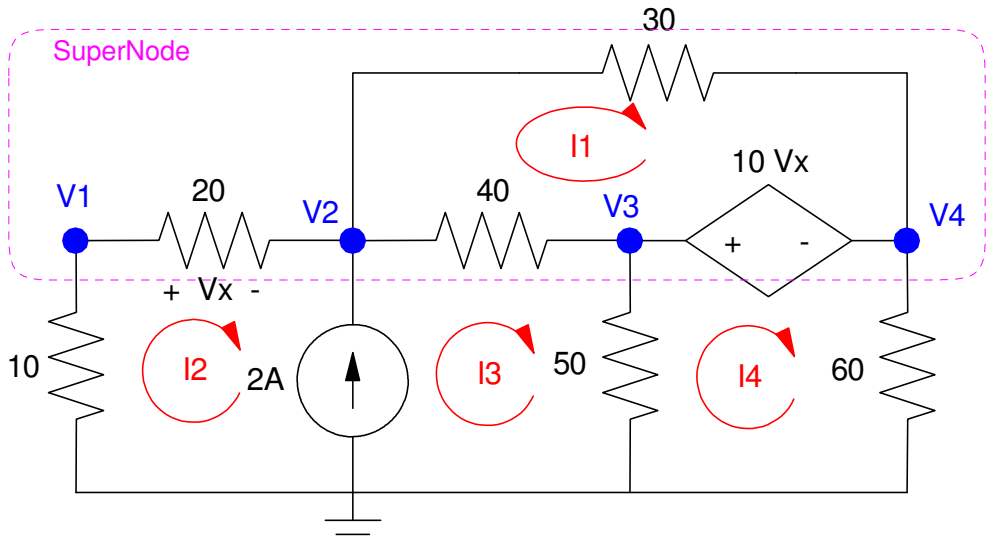

Write the voltage node equations

$$V_x = V_1 - V_2$$

$$10V_x = V_3 - V_4$$

$$\left(\frac{V_1}{10}\right) + \left(\frac{V_1 - V_2}{20}\right) = 0$$

$$\left(\frac{V_2 - V_1}{20}\right) + \left(\frac{V_2 - V_4}{30}\right) + \left(\frac{V_2 - V_3}{40}\right) - 2 = 0$$

Supernode:

$$\left(\frac{V_1}{10}\right) - 2 + \left(\frac{V_3}{50}\right) + \left(\frac{V_4}{60}\right) = 0$$

Group terms

$$V_1 - V_2 - V_x = 0$$

$$V_3 - V_4 - 10V_x = 0$$

$$\left(\frac{1}{10} + \frac{1}{20}\right) V_1 - \left(\frac{1}{20}\right) V_2 = 0$$

$$-\left(\frac{1}{20}\right) V_1 + \left(\frac{1}{20} + \frac{1}{30} + \frac{1}{40}\right) V_2 - \left(\frac{1}{40}\right) V_3 - \left(\frac{1}{30}\right) V_4 = 2$$

$$\left(\frac{1}{10}\right) V_1 + \left(\frac{1}{50}\right) V_3 + \left(\frac{1}{60}\right) V_4 = 2$$

Place in matrix form

$$\begin{bmatrix} 1 & -1 & 0 & 0 & -1 \\ 0 & 0 & 1 & -1 & -10 \\ \left(\frac{1}{10}+\frac{1}{20}\right) & \left(\frac{-1}{20}\right) & 0 & 0 & 0 \\ \left(\frac{-1}{20}\right) & \left(\frac{1}{20}+\frac{1}{30}+\frac{1}{40}\right) & \left(\frac{-1}{40}\right) & \left(\frac{-1}{30}\right) & 0 \\ \left(\frac{1}{10}\right) & 0 & \left(\frac{1}{50}\right) & \left(\frac{1}{60}\right) & 0 \end{bmatrix} \begin{bmatrix} V_1 \\ V_2 \\ V_3 \\ V_4 \\ V_x \end{bmatrix} = \begin{bmatrix} 0 \\ 0 \\ 0 \\ 2 \\ 2 \end{bmatrix}$$

Solve using Matlab (or similar program)

```
A = [1,-1,0,0,-1 ; 0,0,1,-1,-10 ; 1/10+1/20,-1/20,0,0,0]
A = [A ; -1/20,1/20+1/30+1/40,-1/40,-1/30,0];
A = [A ; 1/10,0,1/50,1/60,0]

    1.     - 1.           0.        0.          - 1.
    0.       0.           1.      - 1.          - 10.
    0.15   - 0.05         0.        0.            0.
  - 0.05     0.1083333  - 0.025   - 0.0333333     0.
    0.1      0.           0.02      0.0166667     0.

B = [0;0;0;2;2]

    0.
    0.
    0.
    2.
    2.

V = inv(A)*B
```

V1	**17.40458**
V2	**52.21374**
V3	**-151.14504**
V4	**196.94656**
Vx	**-34.80916**

6) (Current Loops) For the following circuit

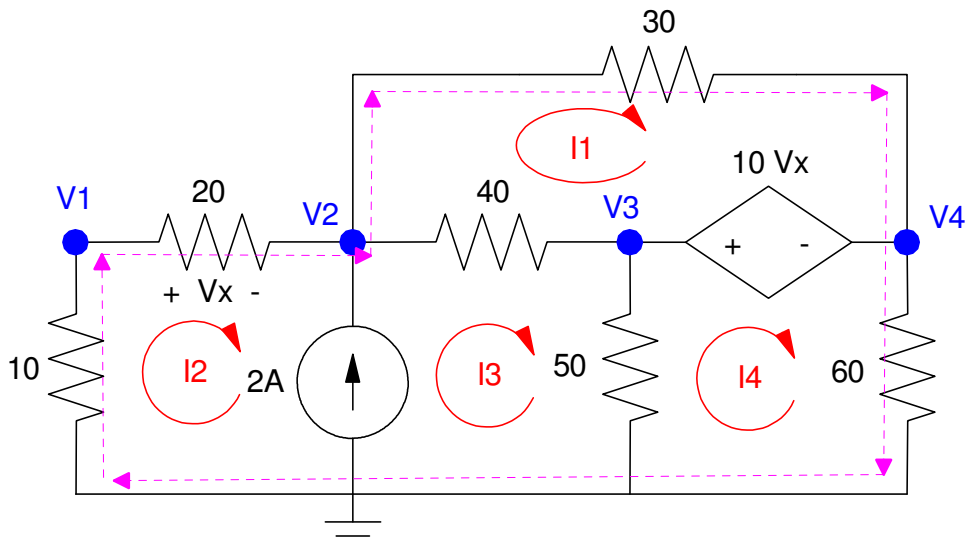

a) Write the current loop equations

$$V_x = 20I_2$$

$$I_3 - I_2 = 2$$

$$30I_1 - 10V_x + 40(I_1 - I_3) = 0$$

$$50(I_4 - I_3) + 10V_x + 60I_4 = 0$$

SuperLoop

$$10I_2 + 20I_2 + 30I_1 + 60I_4 = 0$$

Group terms

$$20I_2 - V_x = 0$$

$$I_3 - I_2 = 2$$

$$70I_1 - 40I_3 - 10V_x = 0$$

$$-50I_3 + 110I_4 + 10V_x = 0$$

$$30I_1 + 30I_2 + 60I_4 = 0$$

Place in matrix form

$$\begin{bmatrix} 0 & 20 & 0 & 0 & -1 \\ 0 & -1 & 1 & 0 & 0 \\ 70 & 0 & -40 & 0 & -10 \\ 0 & 0 & -50 & 110 & 10 \\ 30 & 30 & 0 & 60 & 0 \end{bmatrix} \begin{bmatrix} I_1 \\ I_2 \\ I_3 \\ I_4 \\ V_x \end{bmatrix} = \begin{bmatrix} 0 \\ 2 \\ 0 \\ 0 \\ 0 \end{bmatrix}$$

b) Solve using Matlab (or similar program)

```
A = [0,20,0,0,-1 ; 0,-1,1,0,0 ; 70,0,-40,0,-10 ; 0,0,-50,110,10 ; 30,30,0,60,0]

    0.     20.    0.     0.    - 1.
    0.   - 1.     1.     0.      0.
    70.    0.   - 40.    0.    - 10.
    0.     0.   - 50.    110.    10.
    30.    30.    0.     60.     0.

B = [0;2;0;0;0]

    0.
    2.
    0.
    0.
    0.

I = inv(A)*B
```

I1 -4.8244275
I2 -1.740458
I3 0.2595420
I4 3.2824427
Vx -34.80916

Vx matches the previous solution. It's probably correct.

7) Assume Vin contains a DC and 500 rad/sec (79.57Hz) signal:

$$V_{in} = 10 + 3\sin(500t)$$

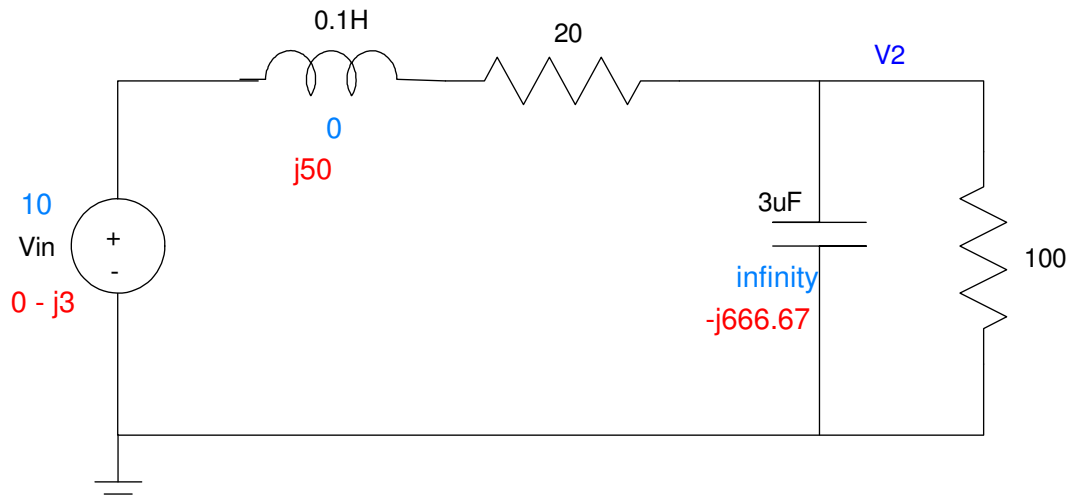

a) Determine the impedances of the inductor, capacitor, and resistor at DC and 1000 rad/sec shown in blue (DC) and red (AC)

b) Determine the voltage, V2, using phasor analysis

DC (blue)

Vin = 10 + j0

$$V_2 = \left(\frac{100}{100+20}\right)(10 + j0)$$

$$V_2 = 8.333$$

$$v_2(t) = 8.333$$

AC (red)

$$V_{in} = 0 - j3$$

$$100||(-j666.67) = 97.80 - j14.67$$

$$V_2 = \left(\frac{97.80 - j14.67}{(97.80 - j14.67) + (20 + j50)}\right)(0 - j3)$$

$$V_2 = 1.028 - j2.182$$

$$v_2(t) = 1.028\cos(500t) + 2.182\sin(500t)$$

The total answer is then

$$\boxed{v_2(t) = 8.333 + 1.028\cos(500t) + 2.182\sin(500t)}$$

c) Check your answer using PartSim (or similar program)

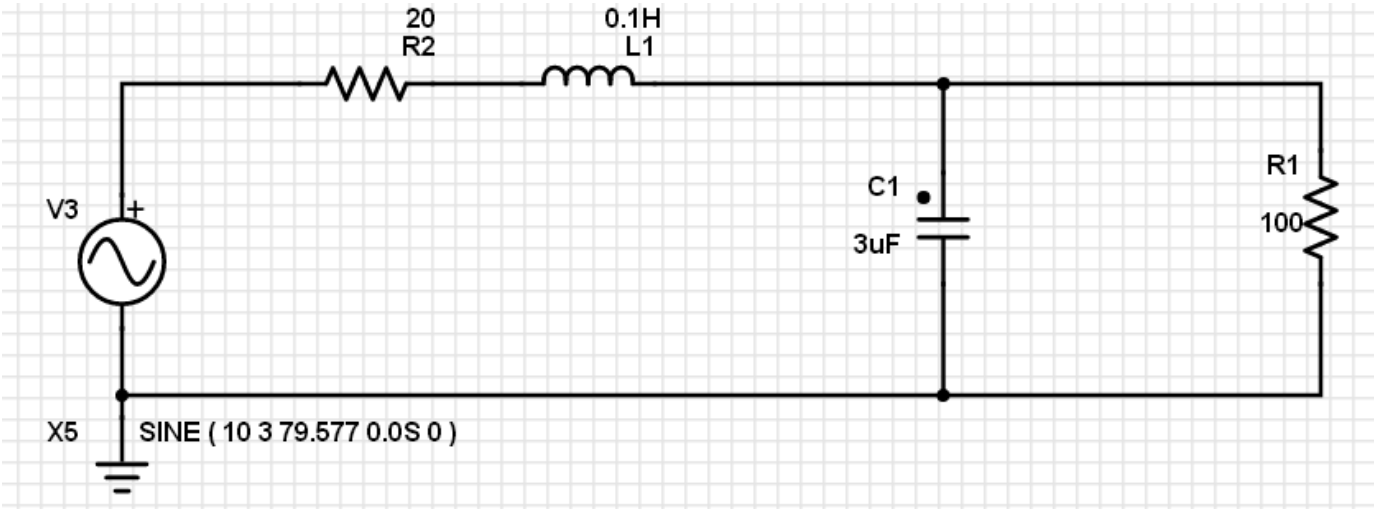

PartSim circuit. Note that 500 rad/sec is 79.577 Hz

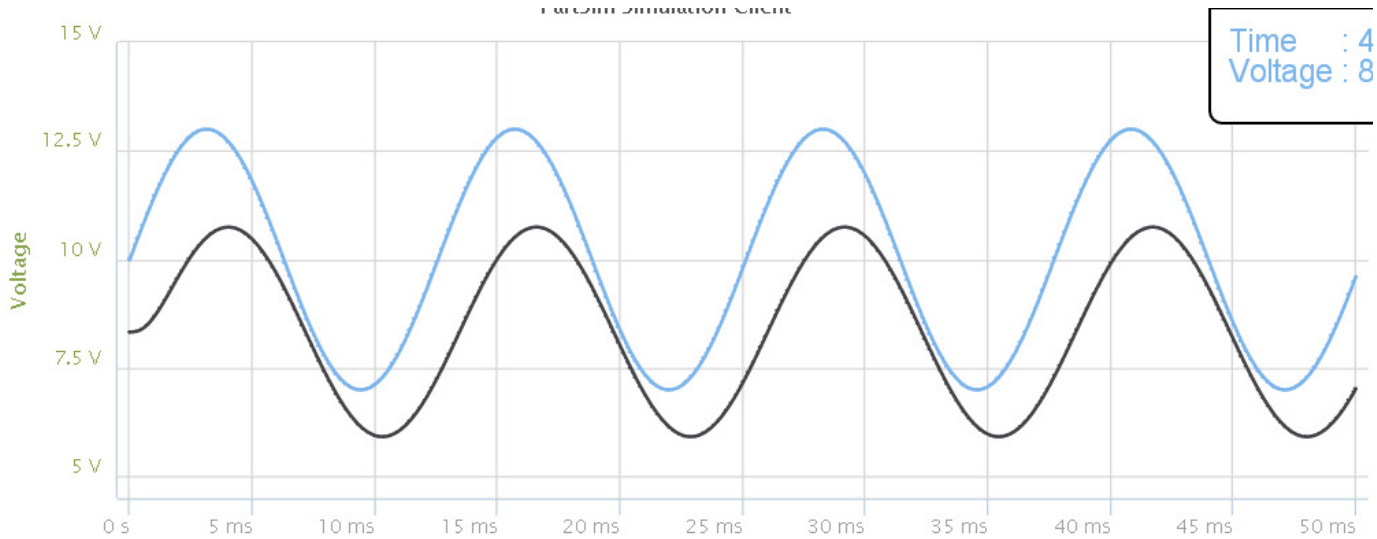

From the simulation

max(V2) = 10.742V

min(V2) = 5.923V

V2(DC) = (max + min) / 2 = 8.333V *same as calculated*

V2(AC) = (max - min) = 4.819Vpp = 2.410Vp

| 1.028 - j2.182 | = 2.142Vp *same as the simulation results*