ECE 320 - Homework #2 Solution

Semiconductors, PN Junction, Diode VI Characteristics. Due Wednesday, January 27th

Please make the subject "ECE 320 HW#2" if submitting homework electronically to Jacob_Glower@yahoo.com (or on blackboard)

Semiconductors

1) Why does the resistance of silicon decrease as temperature goes up?

As temperature goes up, more thermal electron / hole pairs (charge carriers) are created.

As the number of charge carriers goes up, the resitance goes down.

2) What doping of Boron (p-type) do you need to make an 0805 resistor have a resistance of 2000 Ohms? The dimensions of an 0805 resistor are

L = 2.0mm, W = 1.25mm, H = 0.95mm

$$R = \frac{\rho L}{A}$$

$$2000\Omega = \frac{\rho \cdot 0.2cm}{0.125cm \cdot 0.095cm}$$

$$\rho = 118.75\ \Omega\ cm$$

$$\sigma = \frac{1}{\rho} = 0.008421\ \frac{1}{\Omega\ cm} = n_p q \mu_p + n_n q \mu_n$$

$$0.008421 \approx n_p \cdot 1.6x10^{-19} \cdot 500$$

$$\boxed{n_p = 1.05x10^{14}\ \frac{\text{atoms}}{cc}}$$

3) A thermistor has the following resistance - voltage relationship

$$R = 1000 \exp\left(\frac{3905}{T} - \frac{3905}{298}\right)\Omega$$

where T is the temperature in degrees Kelvin. What is the resistance you'll read at

- +96.1F (hottest day in Fargo in 2019)
- -32.8F (coldest day in Fargo in 2019)
- +43.1F (average temperature in Fargo in 2019)

96.1F = 35.61C

R = 637 Ohms

-32.8F = -36.00C

R = 29,159 Ohms

+43.1F = 6.167C

R = 2420 Ohms

PN Junction

4) Why can current flow p to n but not n to p?

Any of the following are valid answers:

Current flowing p to n uses majority carriers. A large number of carriers means low resistance.

Current flowing n to p uses miniroty carriers. A small number of carriers means a very high resistance

Voltage from p to n reduces the size of the depletion zone. At 0.7V for silicon, the depletion zone is squeezed down to zero, at which point current flows.

Voltage n to p just makes the depletion zone larger.

If you apply enough voltage to overcome the potential energy barrier (0.7V for silicon), current flows.

Diode VI Characteristics

5) Draw the load line for the following circuit and compute Id and Vd. The diode VI curge is shown on the graph.

- If Id = 0 (the x-axis), Vd = 11V
- If Vd = 0, Id = 11V / 130 Ohms = 84mA

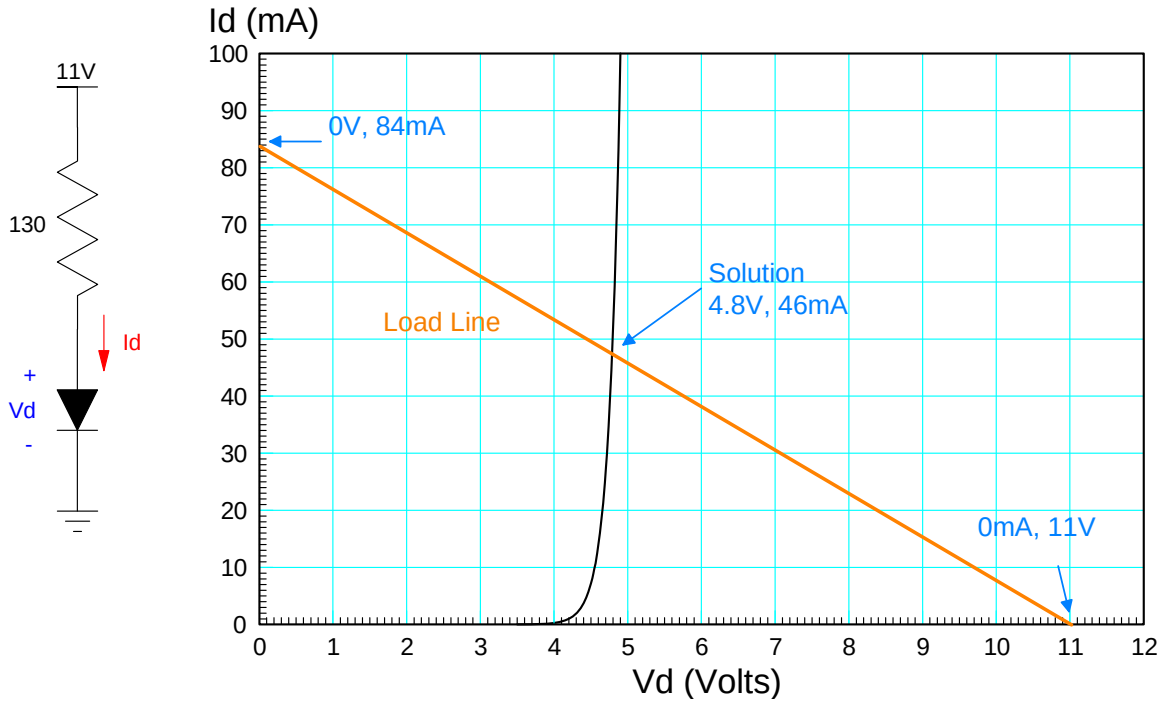

Assume the VI characteristics for a diode are

$$V_d = 0.052 \cdot \ln\left(\frac{I_d}{10^{-8}} + 1\right) \qquad I_d = 10^{-8}\left(\exp\left(\frac{V_d}{0.052}\right) - 1\right)$$

6) Write the voltage node equations for the following circuit. Solve for V1 .. V4

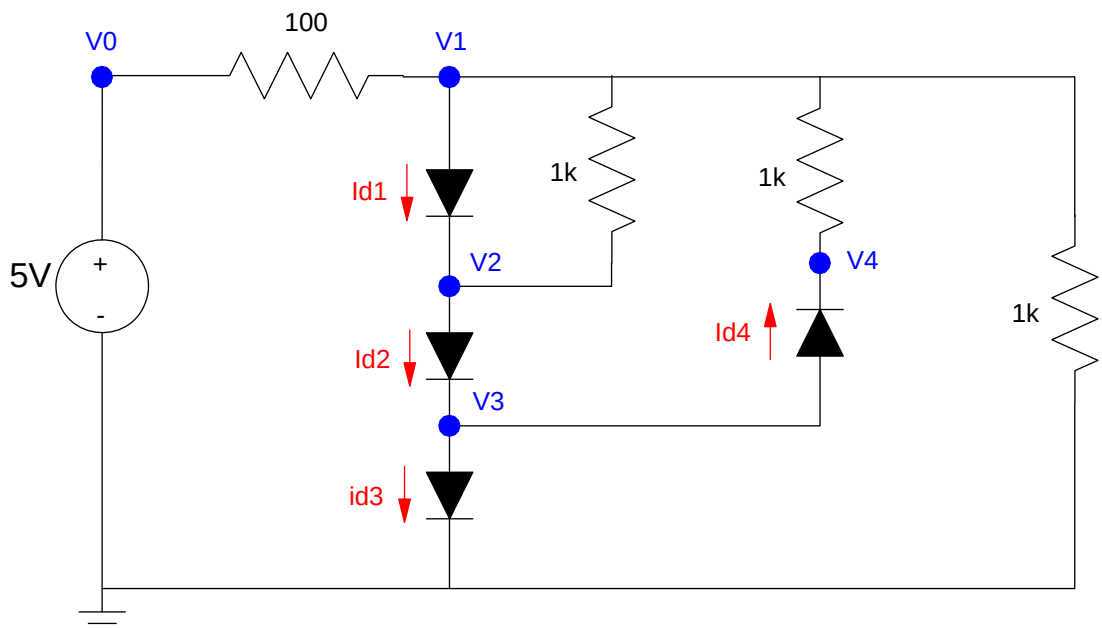

Start with the diode equations

$$I_{d1} = 10^{-8}\left(\exp\left(\frac{V_1 - V_2}{0.052}\right) - 1\right)$$

$$I_{d2} = 10^{-8}\left(\exp\left(\frac{V_2 - V_3}{0.052}\right) - 1\right)$$

$$I_{d3} = 10^{-8}\left(\exp\left(\frac{V_3 - 0}{0.052}\right) - 1\right)$$

$$I_{d4} = 10^{-8}\left(\exp\left(\frac{V_3 - V_4}{0.052}\right) - 1\right)$$

Write the voltage node equtions

$$\left(\frac{V_1 - V_0}{100}\right) + I_{d1} + \left(\frac{V_1 - V_2}{1000}\right) + \left(\frac{V_1 - V_4}{1000}\right) + \left(\frac{V_1}{1000}\right) = 0$$

$$-I_{d1} + I_{d2} + \left(\frac{V_2 - V_1}{1000}\right) = 0$$

$$-I_{d2} + I_{d3} + I_{d4} = 0$$

$$-I_{d4} + \left(\frac{V_4 - V_1}{1000}\right) = 0$$

Solve in Matlab using fminsearch

```
function [ J ] = cost_diode4( z )
 V1 = z(1);
 V2 = z(2);
 V3 = z(3);
 V4 = z(4);

 Idss = 1e-8;
 nVt = 0.052;

 Id1 = Idss* exp( (V1 - V2)/nVt - 1 );
 Id2 = Idss* exp( (V2 - V3)/nVt - 1 );
 Id3 = Idss* exp( (V3 - 0)/nVt - 1 );
 Id4 = Idss* exp( (V3 - V4)/nVt - 1 );

 e1 = (V1 - 5)/100 + Id1 + (V1-V2)/1000 + (V1-V4)/1000 + (V1/1000);
 e2 = (V2-V1)/1000 - Id1 + Id2;
 e3 = -Id2 + Id3 + Id4;
 e4 = -Id4 + (V4-V1)/1000;

 J = e1^2 + e2^2 + e3^2 + e4^2;

end
```

The solution is

```
[V,e] = fminsearch('cost_diode4',[2.1,1.4,0.7,2.1])

V =     2.4404    1.6281    0.8141    2.4403

e =     1.1022e-006

[V,e] = fminsearch('cost_diode4',V)

          V1        V2         V3       V4
V =     2.6168    1.7450    0.8725    2.6169

e =   4.9504e-015
```

7) Check your results in PartSim. (use Fairchild, Rectifier Diode, 1N4005)

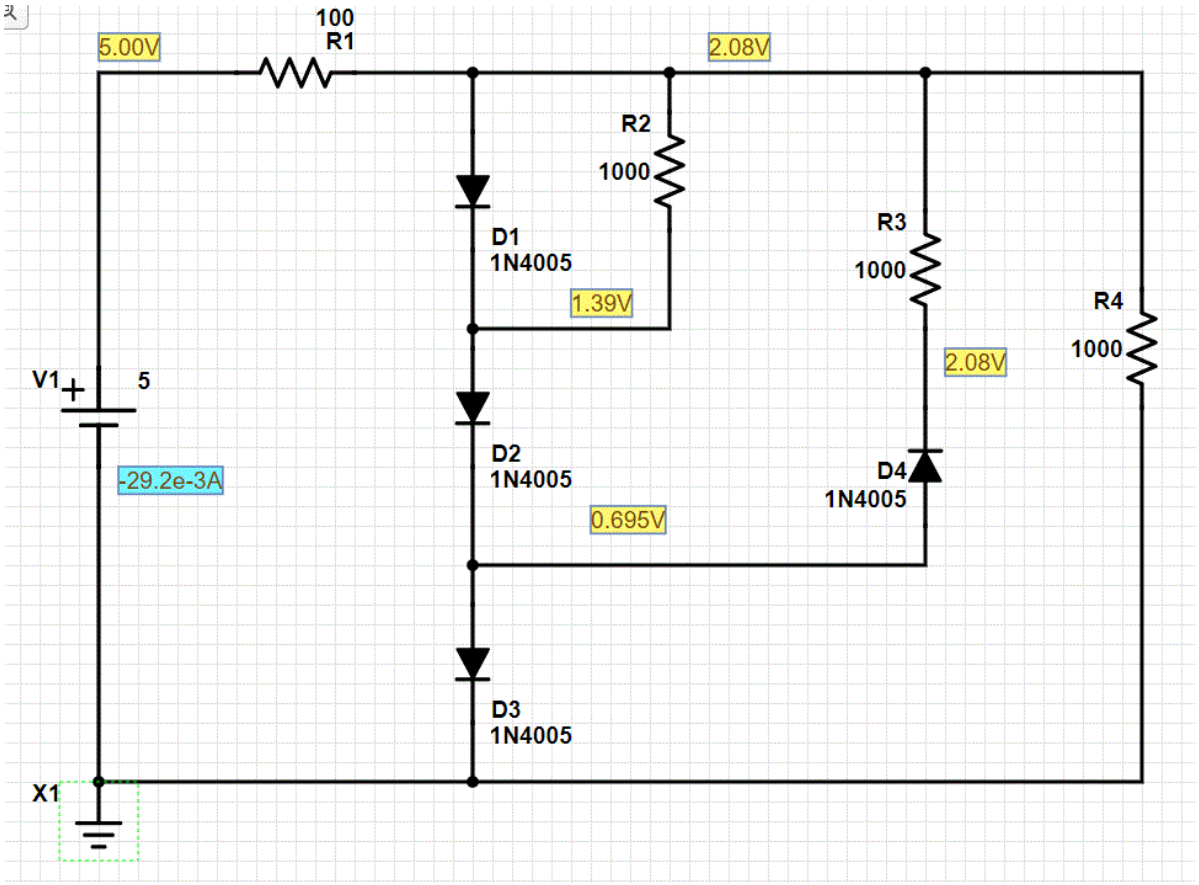

8) Build this circuit and measure the voltages V1, V2, and V3. Use a 4004 diode (in room 211 - or any silicon diode)

	Calculations problem 6	Simulation problem 7	Measured (lab) problem 8
V1	2.4404 V	2.08 V	2.22
V2	1.6281 V	1.39 V	1.48
V3	0.8141 V	0.695 V	0.74
V4	2.4403 V	2.08 V	2.21

9) Write the voltage node equations for the following circuit. Solve for { V1, V2, V3, V4 }

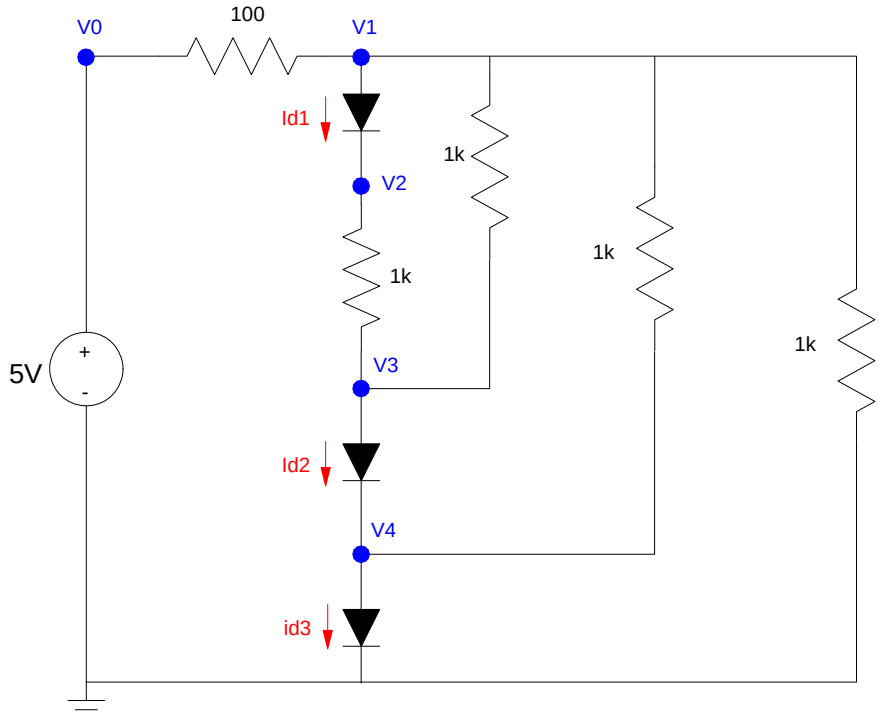

Start with the diode equations

$$I_{d1} = 10^{-8}\left(\exp\left(\frac{V_1 - V_2}{0.052}\right) - 1\right)$$

$$I_{d2} = 10^{-8}\left(\exp\left(\frac{V_3 - V_4}{0.052}\right) - 1\right)$$

$$I_{d3} = 10^{-8}\left(\exp\left(\frac{V_4 - 0}{0.052}\right) - 1\right)$$

Write the voltage node equations

$$\left(\frac{V_1 - V_0}{100}\right) + I_{d1} + \left(\frac{V_1 - V_3}{1000}\right) + \left(\frac{V_1 - V_4}{1000}\right) + \left(\frac{V_1}{1000}\right) = 0$$

$$-I_{d1} + \left(\frac{V_2 - V_3}{1000}\right) = 0$$

$$\left(\frac{V_3 - V_1}{1000}\right) + \left(\frac{V_3 - V_2}{1000}\right) + I_{d2} = 0$$

$$\left(\frac{V_4 - V_1}{1000}\right) - I_{d2} + I_{d3} = 0$$

Solve using Matlab

Function in Matlab

```
function [ J ] = cost_diode4( z )
 V1 = z(1);
 V2 = z(2);
 V3 = z(3);
 V4 = z(4);

 Idss = 1e-8;
 nVt = 0.052;

 Id1 = Idss* exp( (V1 - V2)/nVt - 1 );
 Id2 = Idss* exp( (V3 - V4)/nVt - 1 );
 Id3 = Idss* exp( (V4 - 0)/nVt - 1 );

 e1 = (V1 - 5)/100 + Id1 + (V1-V3)/1000 + (V1-V4)/1000 + (V1/1000);
 e2 = (V2-V3)/1000 - Id1;
 e3 = (V3-V1)/1000 + (V3-V2)/1000 + Id2;
 e4 = (V4-V1)/1000 -Id2 + Id3;

 J = e1^2 + e2^2 + e3^2 + e4^2;

end
```

Solution:

```
[V,e] = fminsearch('cost_diode4',[2.1,1.4,0.7,0.7])

          V1        V2        V3        V4
V =    3.8849    3.2058    1.4783    0.7538

e =  2.0161e-013
```

10) Check your results in PartSim. (use Fairchild, Rectifier Diode, 1N4005)

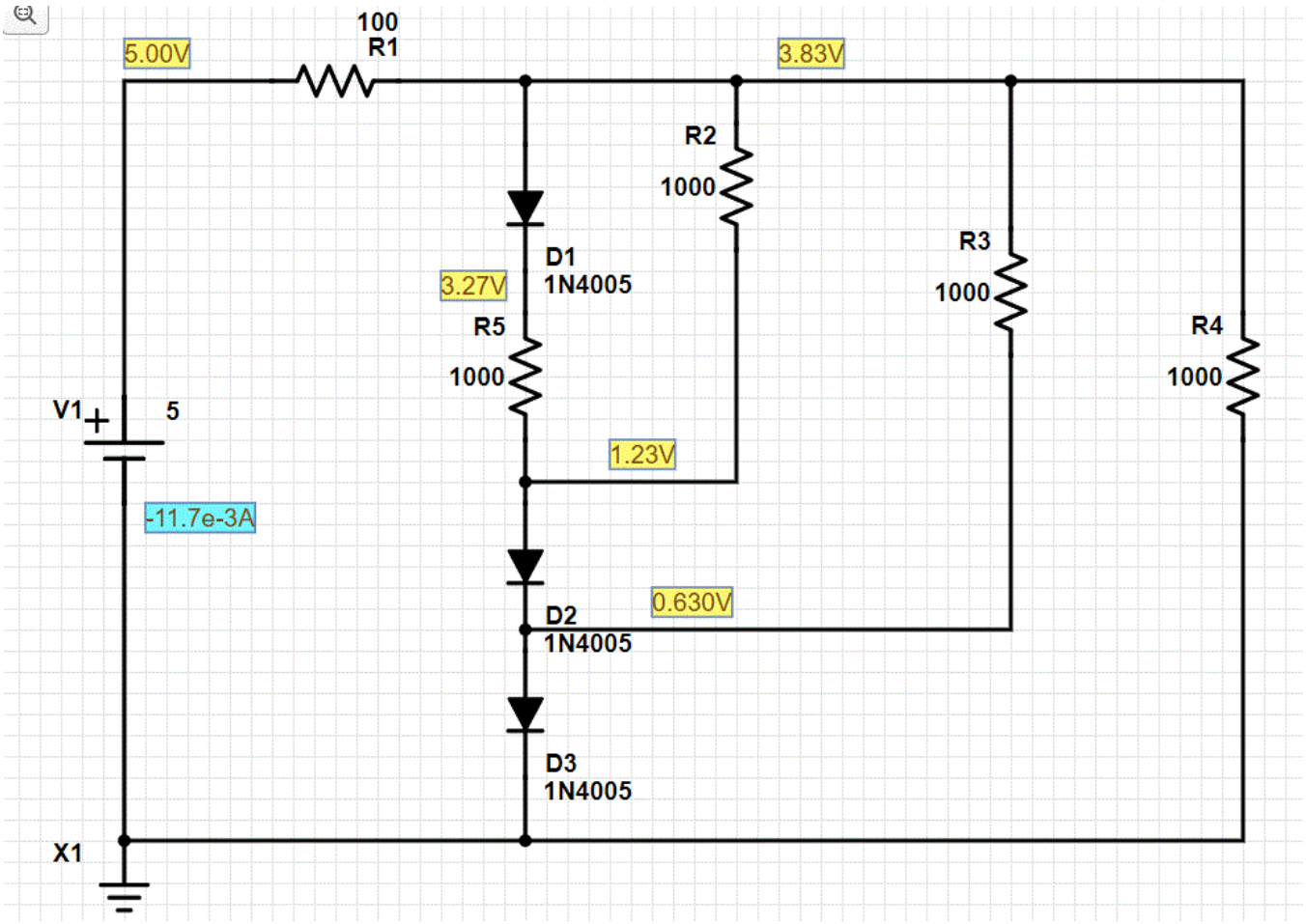

11) Build this circuit and measure the voltages, Use a 4004 diode (in room 211 - or any silicon diode)

	Calculations problem 9	Simulation problem 10	Measured (lab) problem 11
V1	3.8849 V	3.83 V	3.87
V2	3.2058 V	3.27 V	3.22
V3	1.4783 V	1.23 V	1.48
V4	0.7538 V	0.63 V	0.82