ECE 320 - Homework #3 Solution

Ideal Diodes, LEDs, AC to DC Converters. Due Monday, February 3rd

Please make the subject "ECE 320 HW#3" if submitting homework electronically to Jacob_Glower@yahoo.com (or on blackboard)

1) Assume ideal silicon didoes (Vf = 0.7V). Determine {V1, V2, V3} and {Id1, Id2, Id3}

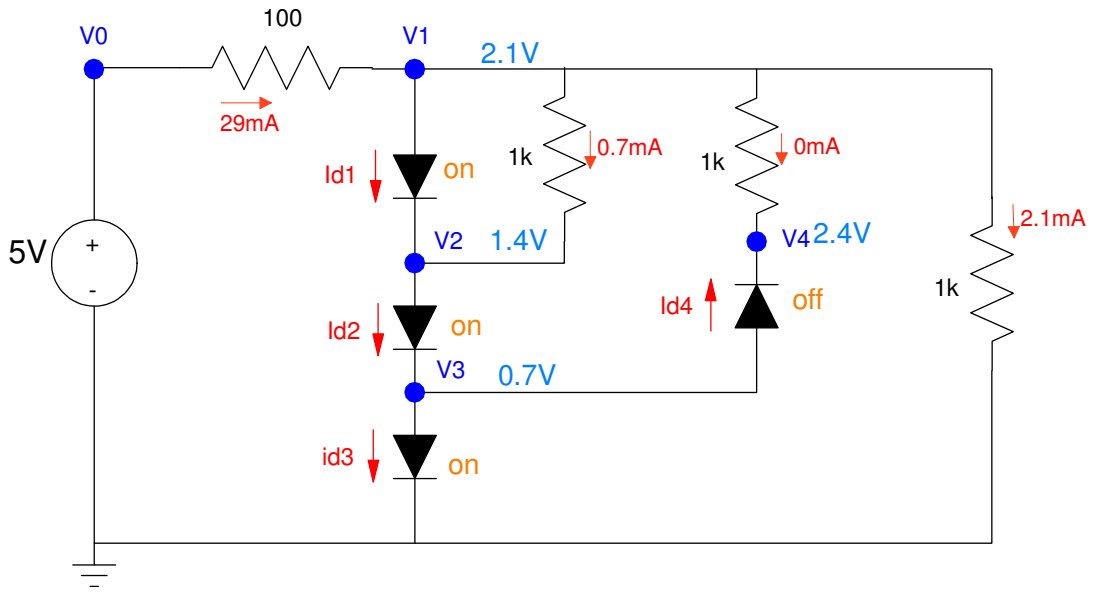

Assume diodes d1, d2, d3 are on, d4 is off. Then

- V3 = 0.7V
- V2 = 1.4V
- V1 = 2.1V

Check: Are the currents positive?

$$29mA = I_{d1} + 0.7mA + 0mA + 2.1mA$$

$$I_{d1} = 26.2mA$$ *check: Id1 > 0 (on)*

$$I_{d2} = I_{d1} + 0.7mA$$

$$I_{d2} = 26.9mA$$ *check: Id2 > 0* (on)

$$I_{d3} = I_{d2} = 26.9mA$$ *check: Id3 > 0 (on)*

$$V_{d4} = V_3 - V_1 = -1.4V < 0.7V$$ *check: Vd3 < 0.7V (off)*

	Calculations hw #2 problem 6	Simulation hw #2 problem 7	Idea Diode hw #3
V1	2.4404 V	2.08 V	2.10 V
V2	1.6281 V	1.39 V	1.40 V
V3	0.8141 V	0.695 V	0.70 V
V4	2.4403 V	2.08 V	2.10 V

2) Change Vin to 2.0V. Determine {V1, V2, V3} and {Id1, Id2, Id3} assuming ideal silicon diodes

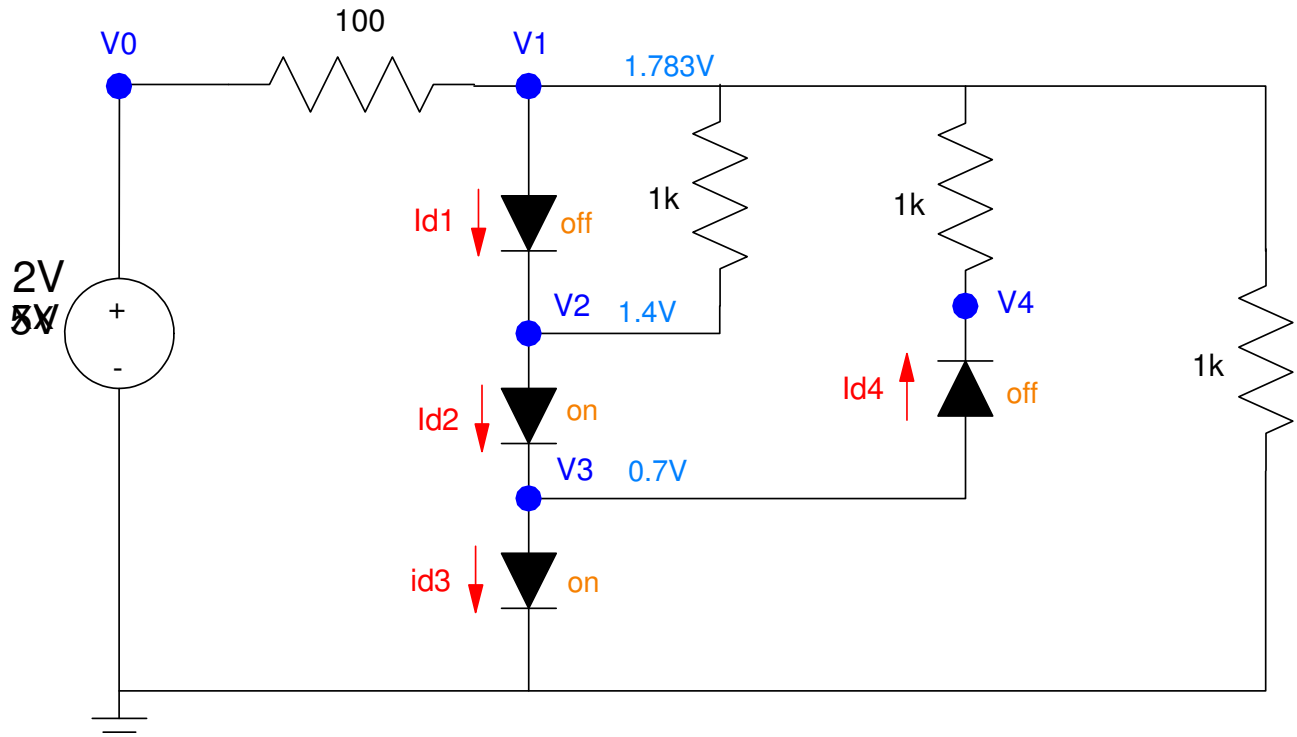

All three diodes can't be on. This causes V1 = 2.1V > 2.0V and current flows backwards

Assume D1 = off, D2 = on, D3 = on, D4 = off. Write the voltage node equation at V1

$$\left(\frac{V_1-2}{100}\right)+\left(\frac{V_1-1.4}{1000}\right)+0+\left(\frac{V_1}{1000}\right)=0$$

$$V_1 = 1.783V$$

Check: Are the currents through the "on" diodes positive?

$$I_{d2} = \left(\frac{V_1-1.4}{1000}\right) > 0$$

$$I_{d3} = I_{d2} > 0$$

Are the voltages across the "off" diodes less than 0.7V?

$$V_{d1} = 1.783V - 1.4V = 0.383V < 0.7V$$

$$V_{d4} = 0.7V - 1.783V = -1.083V < 0.7V$$

3) Assume ideal silicon didoes (Vf = 0.7V). Determine {V1, V2, V3} and {Id1, Id2, Id3}

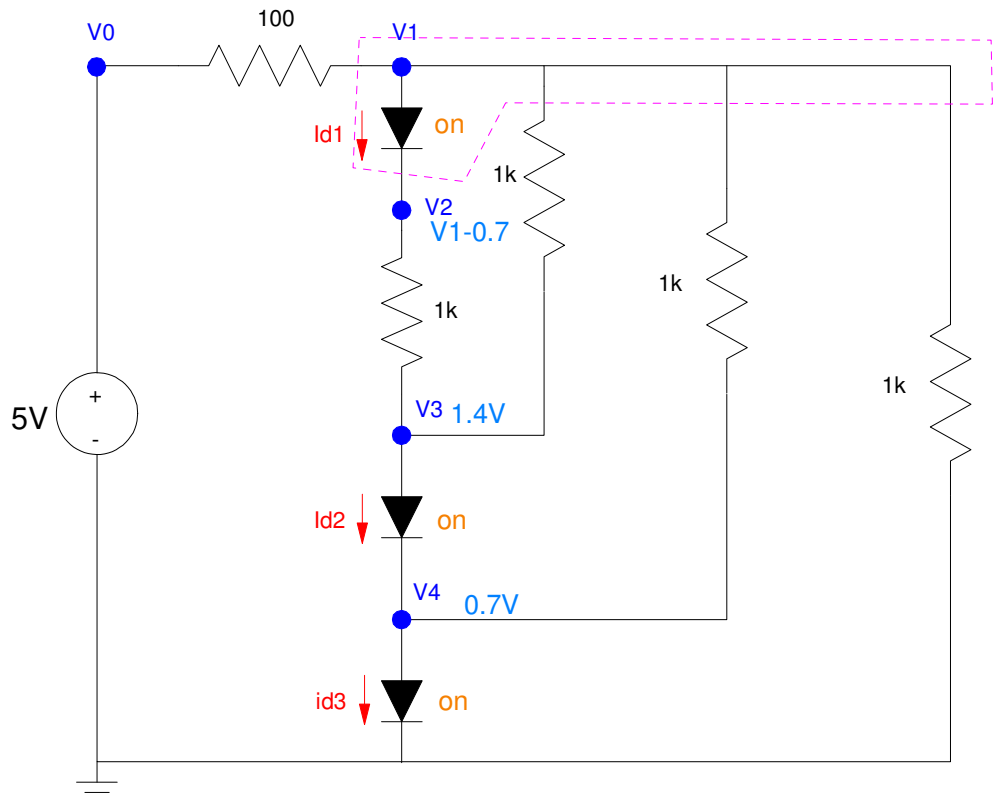

Assume all diodes are on.

- V4 = 0.7V
- V3 = 1.4V
- V2 = V1 - 0.7V

The last equation is then from the voltage node equation at V1 (super-node)

$$\left(\frac{V_1-5}{100}\right)+\left(\frac{V_1-0.7-1.4}{1000}\right)+\left(\frac{V_1-1.4}{1000}\right)+\left(\frac{V_1-0.7}{1000}\right)+\left(\frac{V_1}{1000}\right)=0$$

$$V_1 = 3.871V$$

	Calculations hw 2 problem 9	Simulation hw 2 problem 10	ideal diode hw 3
V1	3.8849 V	3.83 V	3.871 V
V2	3.2058 V	3.27 V	3.171 V
V3	1.4783 V	1.23 V	1.40 V
V4	0.7538 V	0.63 V	0.70 V

LEDs

The specifications for a Piranah RGB LED are

Color	Vf @ 20mA	mcd @ 20mA
red	2.0V	10,000
green	3.2V	10,000
blue	3.2V	10,000

4) Design a circuit to drive these LEDs with a 10V source to produce baby blue:

- Red = 9450 mcd
- Green = 549mcd
- Blue = 7960 mcd

$$I_r = \left(\frac{9450mcd}{10{,}000mcd}\right)20mA = 18.9mA$$

$$R_r = \left(\frac{10V-2.0V}{18.9mA}\right) = 423\Omega$$

$$I_g = \left(\frac{549mcd}{10{,}000mcd}\right)20mA = 1.098mA$$

$$R_g = \left(\frac{10V-3.2V}{1.098mA}\right) = 6193\Omega$$

$$I_b = \left(\frac{7{,}960mcd}{10{,}000mcd}\right)20mA = 15.92mA$$

$$R_b = \left(\frac{10V-3.2V}{15.92mA}\right) = 427\Omega$$

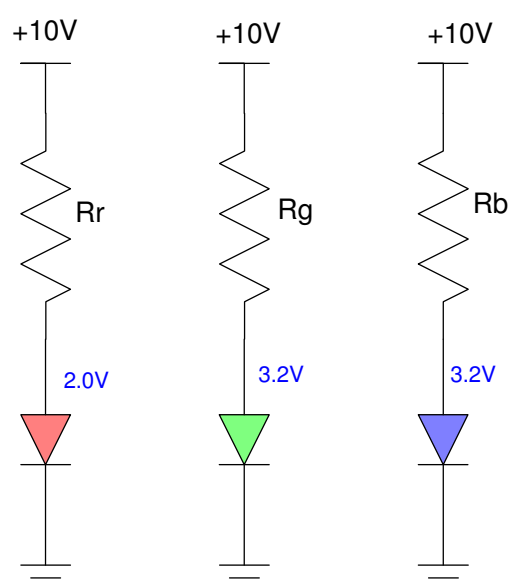

5) Design a circuit to drive these LEDs with a 10V source producing olive green:

- Red = 7529 mcd
- Green = 9450 mcd
- Blue = 705 mcd

Color	Vf @ 20mA	mcd @ 20mA
red	2.0V	10,000
green	3.2V	10,000
blue	3.2V	10,000

	Red	Green	Blue
mcd	7,529	9,450	705
current (mA)	15.06	18.9	1.41
Vf (V)	2	3.2	3.2
R (Ohms)	531.28	359.79	4,822.7

Other colors can be obtained from

https://www.rapidtables.com/web/color/color-wheel.html

AC to DC Converters

6) Assume C1 = 100uF and C2 = 10uF. Determine the votlages at V1 and V2 (DC and AC)

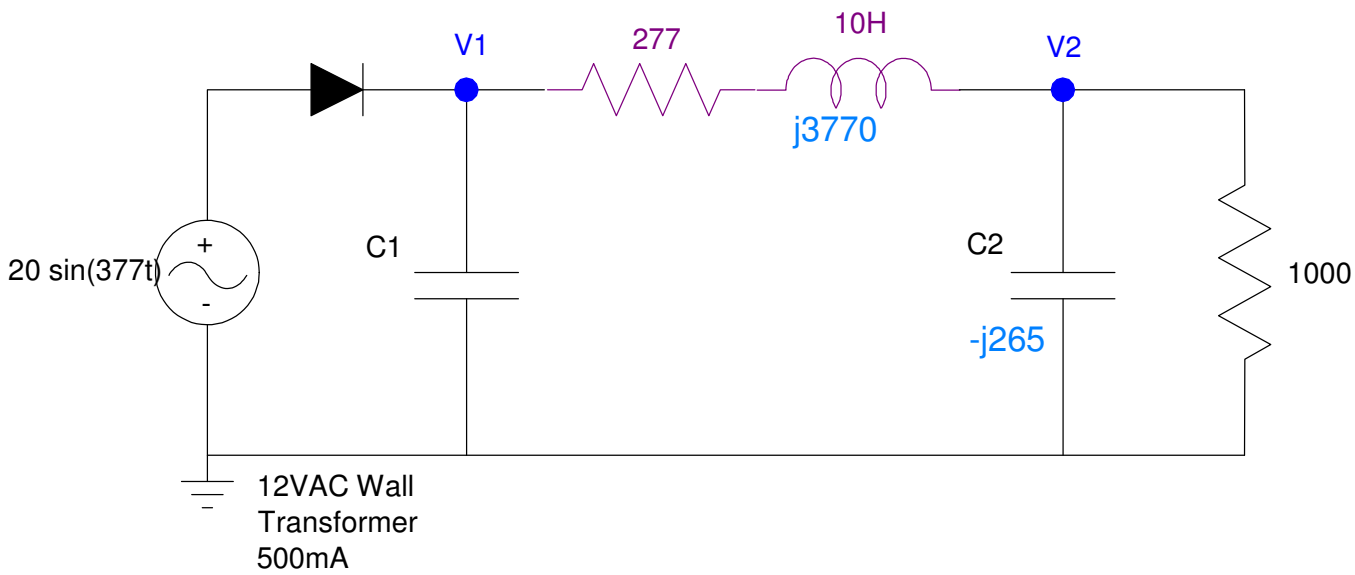

Current:

$$\max(V_1) = 19.3V$$

$$I \approx \left(\frac{19.3V}{1000+277}\right) = 15.11mA$$

$$I = C\frac{dV}{dt}$$

$$15.11mA = 100\mu F \cdot \frac{dV}{1/60s}$$

$$dV = 2.519V_{pp}$$ AC: V1pp

$$V_{1:DC} = 19.3V - \tfrac{1}{2}V_{1pp} = 18.04V$$

$$V_{2:DC} = \left(\frac{1000}{1000+277}\right)18.04V = 14.13V$$

$$V_{2:AC} = \left(\frac{-j265||1000}{(-j265||1000)+(277+j3770)}\right)2.519V_{pp}$$

$$V_{2:AC} = \left(\frac{65.73-j247.8}{(65.73-j247.8)+(277+j3770)}\right)2.519V_{pp}$$

$$V_{2:AC} = 182.5mV_{pp}$$

Simuate this circuit and verity your calculations (V1 and V2, both DC and AC)

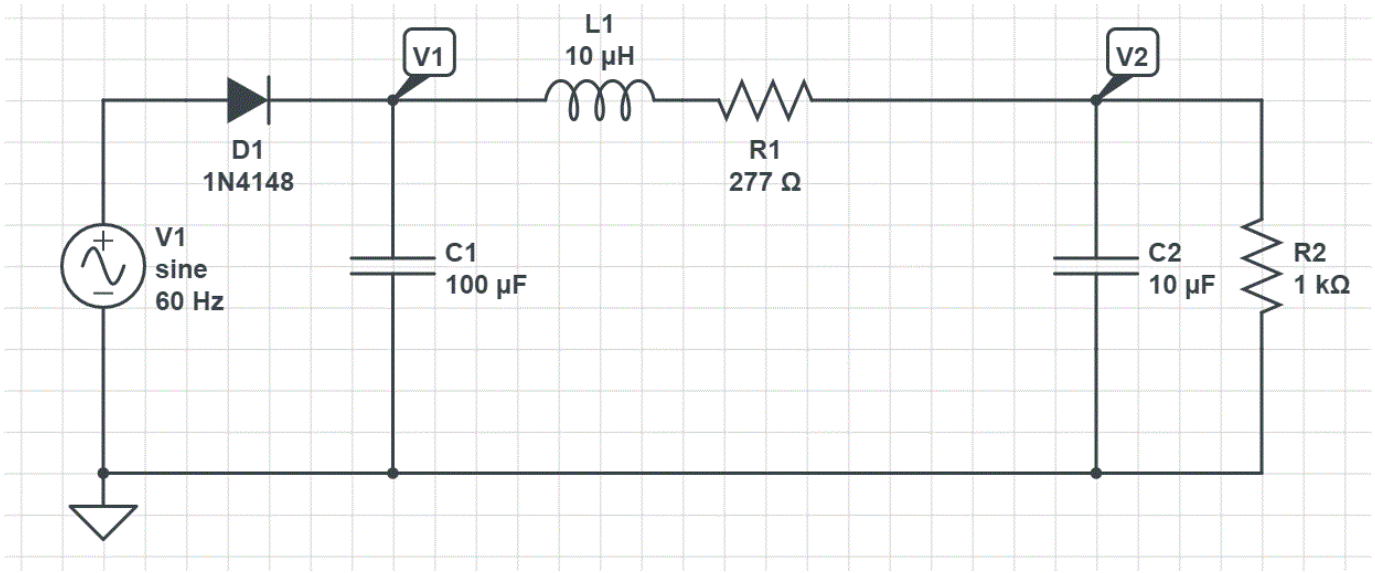

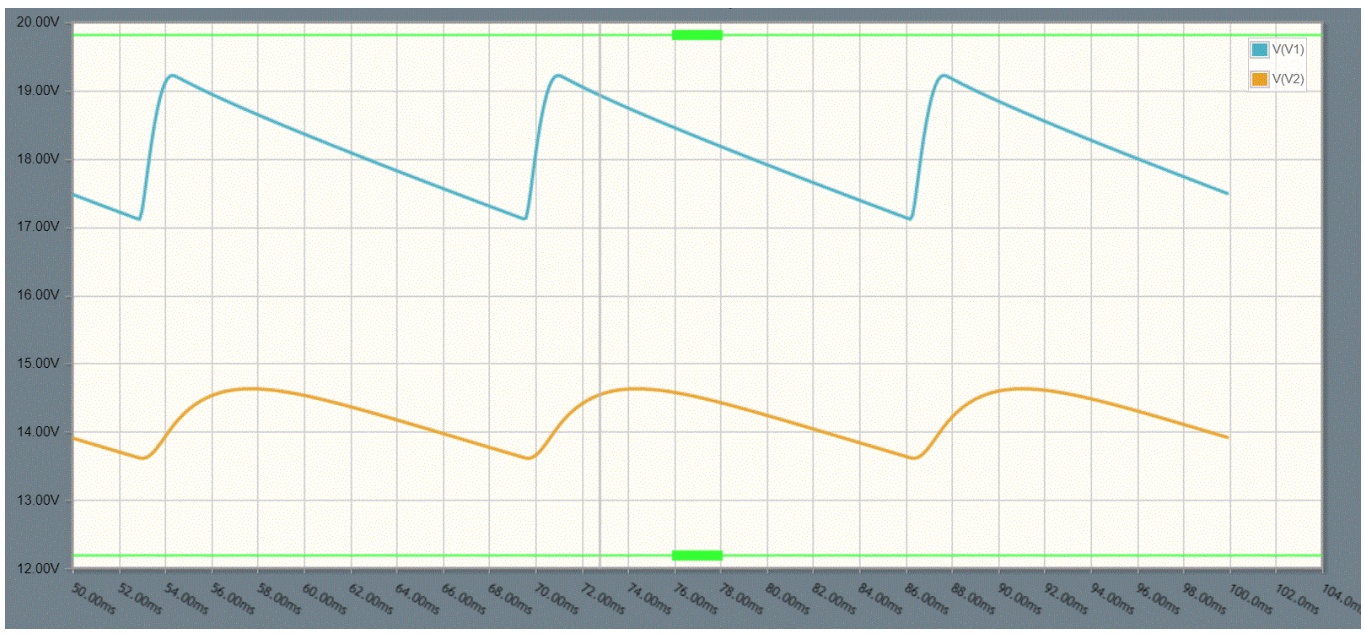

	Simulation				Calculation	
	max	min	DC	AC	DC	AC
V1	19.22	17.13	18.18	2.09	18.04 V	2.519 Vpp
V2	14.63	13.61	14.12	1.02	14.13 V	0.182 Vpp

7) Lab: Build this circuit in lab and measure the voltages at V1 and V2 (both DC and AC). Note that you don't need to add a 277 Ohm resistor - that is the resistance of the 10H inductors we have in stock (approx).

8) Find C1 and C2 so that the ripple at V1 is 2Vpp and the ripple at V2 is 500mVpp.

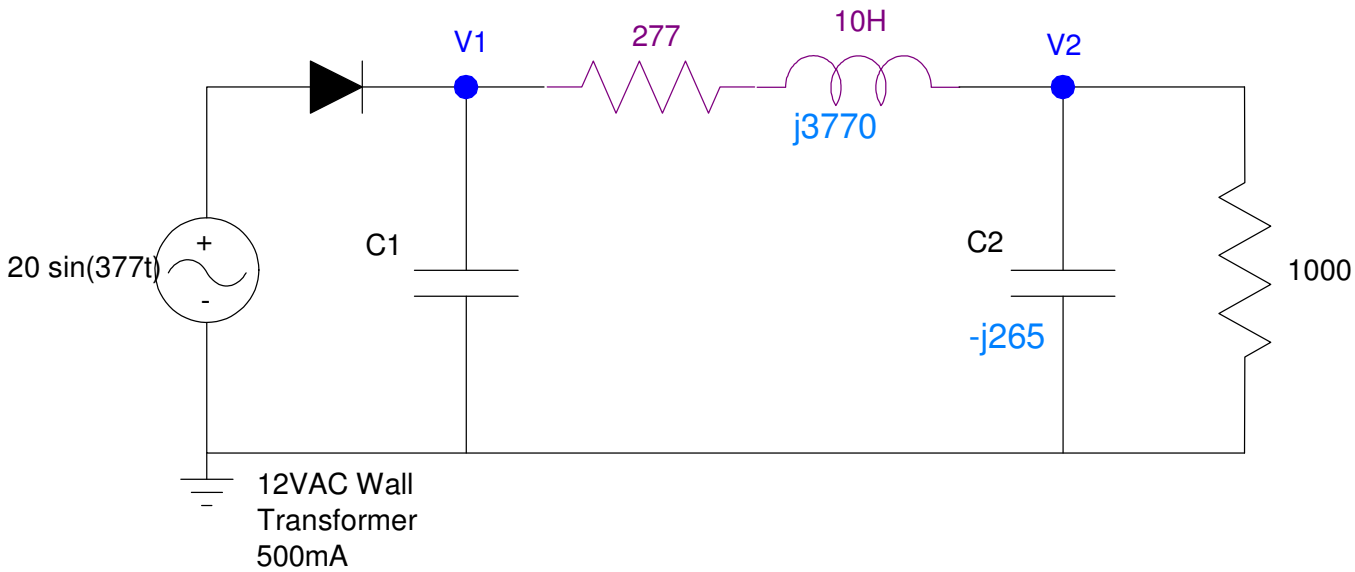

$$V_{1:DC} = 19.3V - \tfrac{1}{2} \cdot 2V_{pp} = 18.3V$$

$$I = \frac{18.3V}{1000+277} = 14.33mA$$

$$I = C\frac{dV}{dt}$$

$$14.33mA = C_1 \cdot \frac{2V_{pp}}{1/60s}$$

$$C_1 = 119\mu F$$

If C2 = 0:

$$V_2 = \left(\frac{1000}{1000+277+j3770}\right)2V_{pp}$$

$$V_2 = 502mV_{pp}$$

This meets the specs, so C2 isn't needed. If V2 was 250mVpp, then

$$Z_{C2} = \left(\frac{250mV}{502mV}\right)1000\Omega = 497\Omega$$

$$\left|\frac{1}{j\omega C_2}\right| = \frac{1}{377 \cdot C_2} = 497\Omega$$

$$C_2 = 5.33\mu F$$

(exact answer is 5.6189 uF)