ECE 320 - Final Exam - Name _____

Spring 2020. Due Friday, March 27th, midnight

Individual Effort. Matlab, CircuitLab, and Calculators Permitted

No Aid Given, Received, or Observed: (please sign if possible): _____

1) The VI characteristics for a diode are shown on the graph below.

- Draw the load line for the circuit shown to the left, and
- Determine the operating point (Vd, Id)

Load Line	Vd	Id
show on graph	**3.8V**	**48mA**

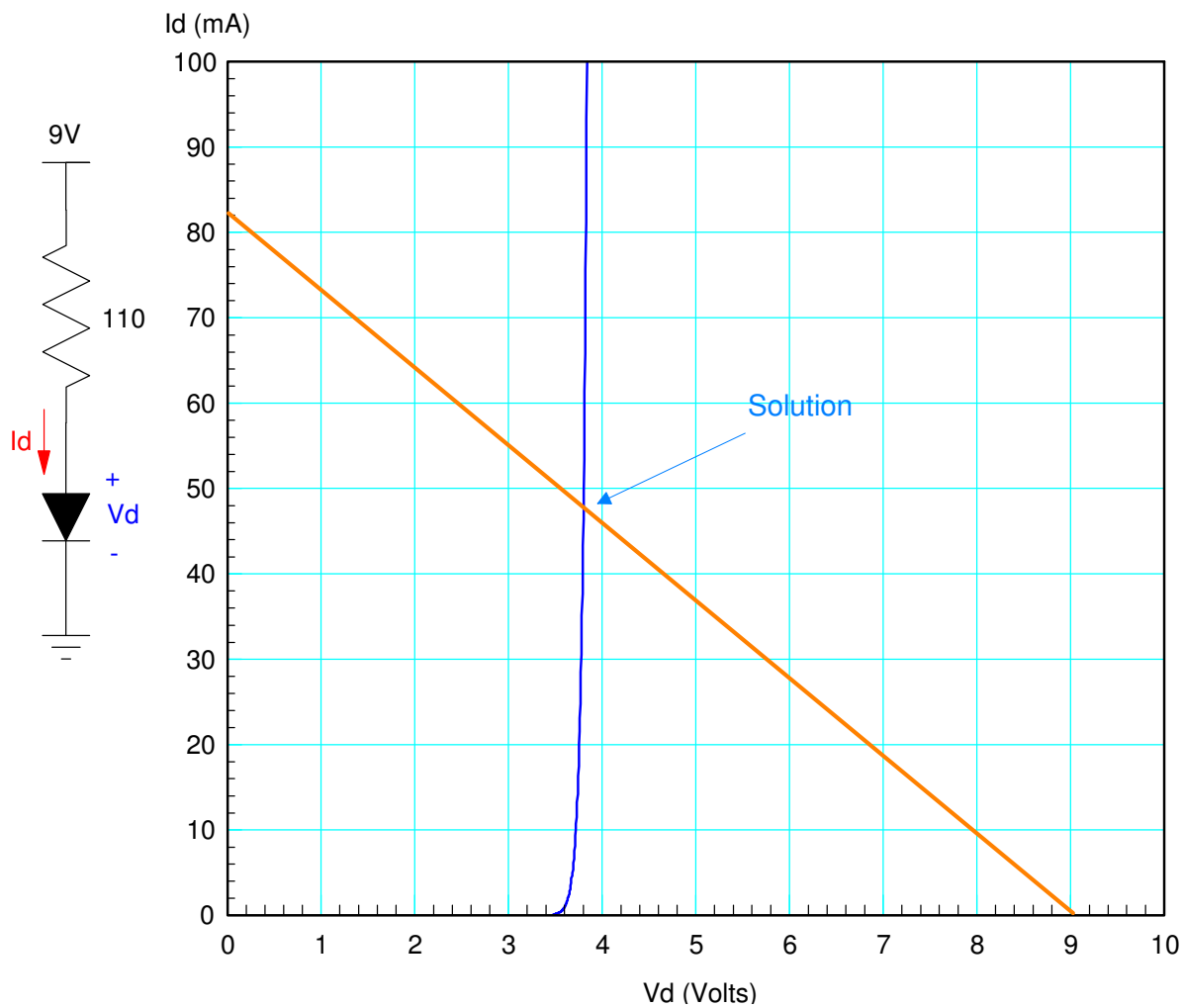

2) Assume ideal silicon diodes. Determine the currents and voltages for the following diode circuit.

I1	I2	I3	I4	V1	V2
9.3 mA	**0 mA**	**0 mA**	**0.53 mA**	**2.7V**	**5.3V**

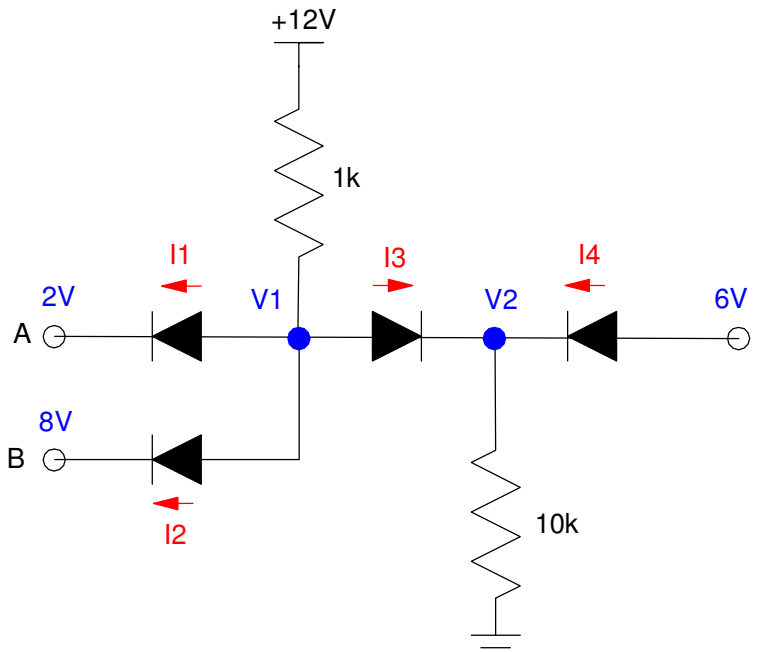

3) AC to DC Converter: Calculate the voltages at V1 and V2 (both DC and AC).

- Assume ideal silicon diodes (Vf = 0.7V).
- Note: your answers should be slightly different from problem #4

V1		V2	
DC	AC (V1pp)	DC	AC (V2pp)
17.75V	**3.0939 Vpp**	**13.65 V**	**2.077 Vpp**

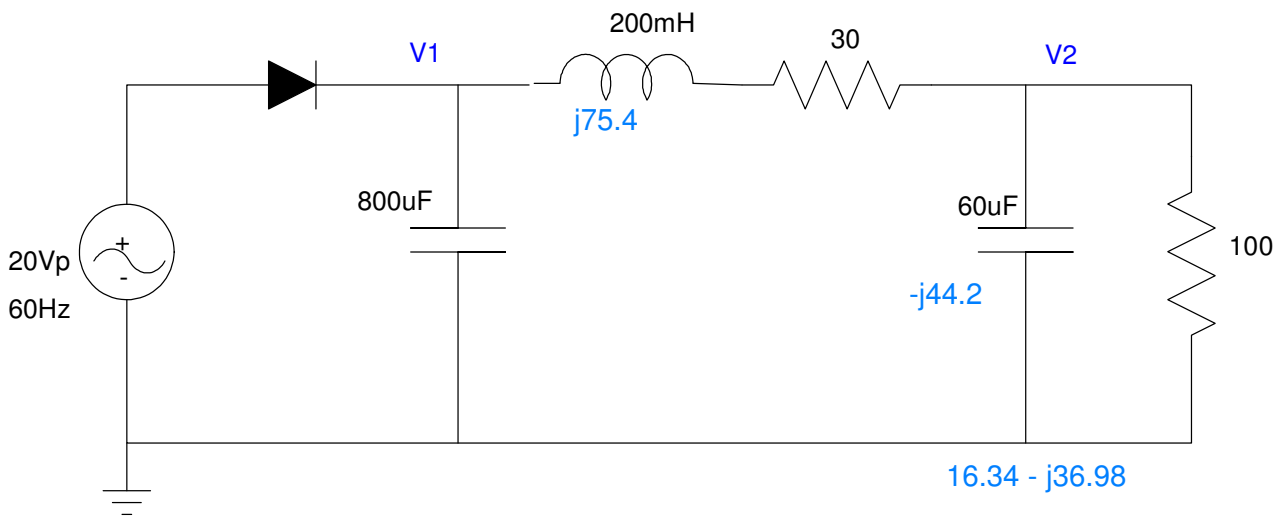

$$I \approx \frac{19.3V}{130\Omega} = 148.5mA$$

$$I = C\frac{dV}{dt}$$

$$148.5mA = 800\mu F\,\frac{dV}{1/60s}$$

$$dV = 3.0929V = V_{1pp}$$

$$V_{1DC} = 19.3V - \frac{1}{2}\,V_{1pp} = 17.75V$$

$$V_2 = \left(\frac{100}{100+30}\right)V_{1DC} = 13.65V$$

$$V_{2(AC)} = \left(\frac{(16.34-j36.98)}{(16.34-j36.98)+(30+j75.4)}\right)3.0929V_{pp}$$

$$V_{2(AC)} = 2.077V_{pp}$$

Bonus! (last page): Verify your answers using CircuitLab

4) Design a Schmitt Trigger which

- Outputs +10V when the temperature goes above 8C,
- Outputs 0V when the temperature drops below 4C, and
- No change for 4C < T < 8C

Assume you are using a thermistor with a temperature - resistance relationship of

$$R = 1000 \cdot \exp\left(\frac{3905}{T} - \frac{3905}{298}\right)\ \Omega$$

where T is the temperature in degrees Kelvin (C + 273).

Assume a 1k resistor

At 8C

- $R = 2209.5\Omega$
- $X = 6.8834V$
- $Y \Rightarrow 10V$

At 4C

- $R = 2700.5\Omega$
- $X = 7.2977V$
- $Y \Rightarrow 0V$

$$gain = \left(\frac{10V - 0V}{7.2977V - 6.8834V}\right) = 24.18$$

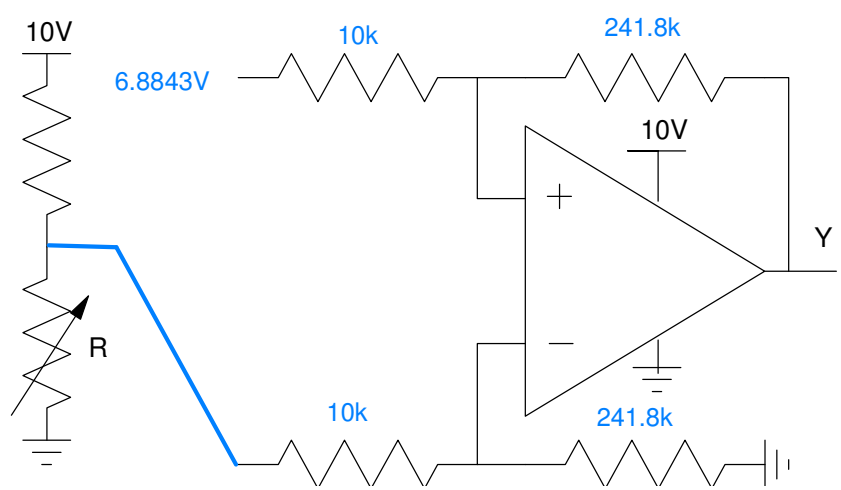

5) Transistors and Load Lines

Determine the following for the following transsitor circuit

Beta	Load Line	Operating Point for		
		a) Vin = 0V	b) Vin = 5V	c) Vin = 10V
50	show on graph	show on graph	show on graph	show on graph

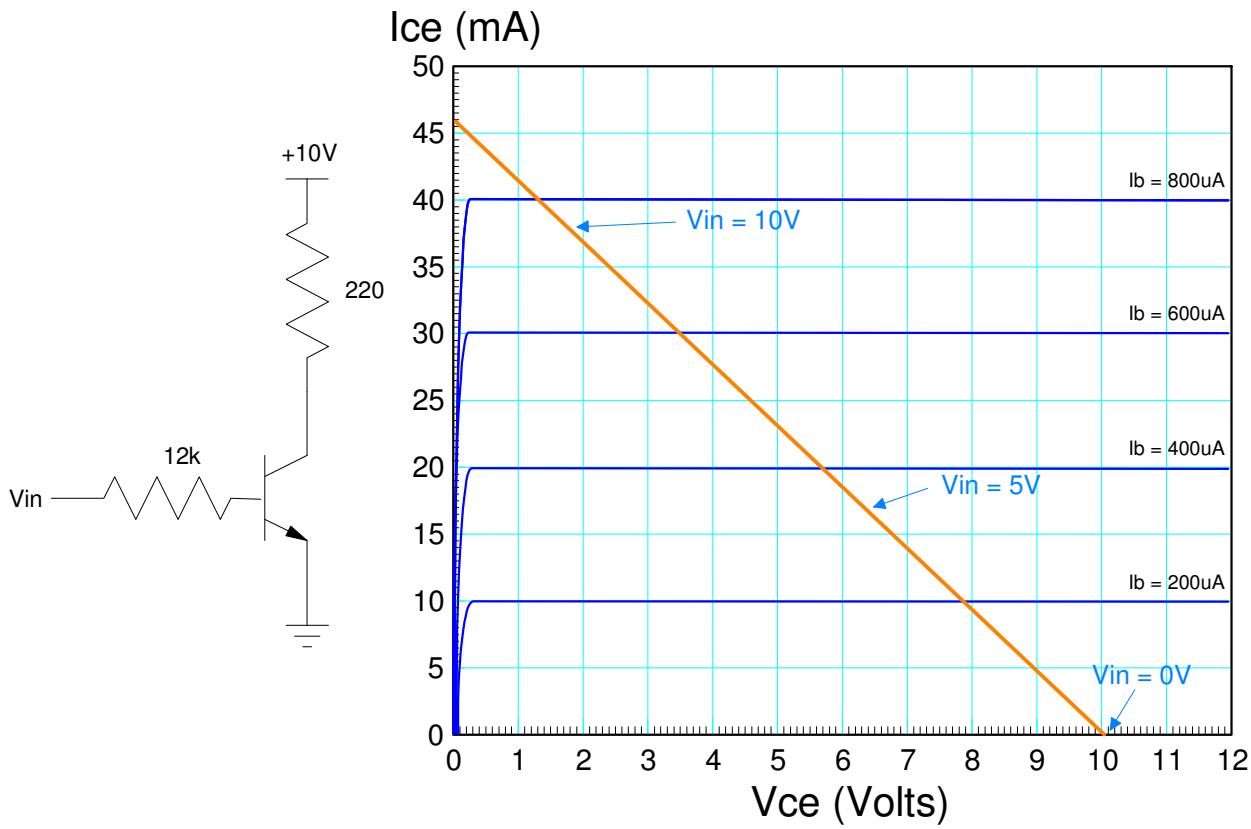

6) Transistor Switch. Determine Rc and Rb so that you can turn on and off a white LED at 3A. Assume

- Vf = 3.0V @ 4A for the LED
- The transistor has a gain of 300
- Vbe = 0.7V, Vce(sat) = 0.2V
- Vin is capable of driving currents up to 10mA

Min value of Rb	Max value of Rb	Rc
430 Ohms	**430 Ohms**	**2.267 Ohms**

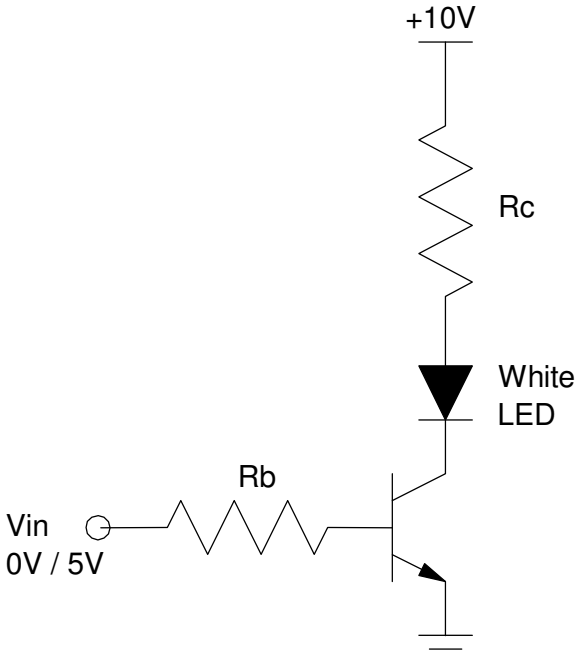

7) Determine the voltages for the following DTL gate. Assume ideal silicon diodes (Vf = 0.7V) and transistors: Vbe = 0.7V

- Vce(sat) = 0.2V
- β = 100

V1	I2	V3	I4	V5
2.1 V	**72.5 uA**	**0.2V**	**0 mA**	**4.878 V**

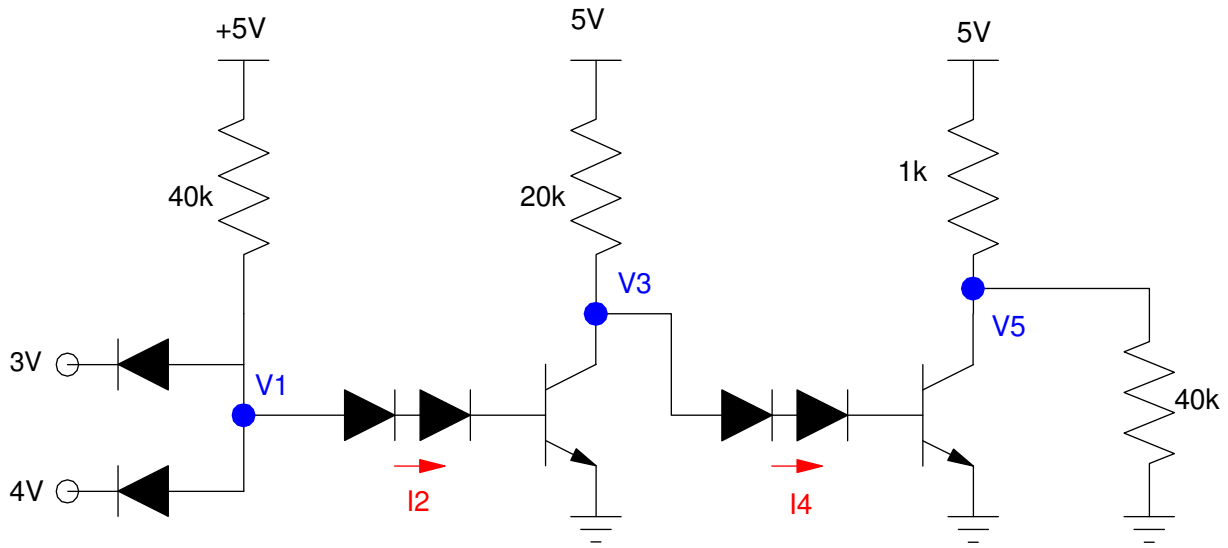

8) The characteristics for a MOSFET are

- Part: IRFD-3-{BF
- Current - Continuous Drain (Id) @ 25°C 2.4A (Tc)
- Rds On (Max) @ Id, Vgs 100mOhm @ 1.4A, 10V
- Vgs(th) (Max) @ Id 4V @ 250µA

Determine the transconductance gain, kn, Vds, and Ids for the following MOSFET circuit

kn (A/V^2)	Vds (Volts)	Ids (mA)	Rds
1.686	**3.254 V**	**843.2 mA**	**3.86 Ohms**

$$I_{ds} = k_n\left(V_{gs} - V_{th} - \frac{V_{ds}}{2}\right)V_{ds}$$

$$1.4A = k_n\left(10V - 4V - \frac{0.14V}{2}\right)0.14V$$

$$k_n = 1.686\ \frac{A}{V^2}$$

Assume saturated

$$I_{ds} = \frac{k_n}{2}(V_{gs} - V_{th})^2$$

$$I_{ds} = 843.2mA$$

$$V_{ds} = 10 - 8I_{ds} = 3.254V$$

$$R_{ds} = \frac{V_{ds}}{Ids} = \frac{3.254V}{843.2mA} = 3.86\Omega$$

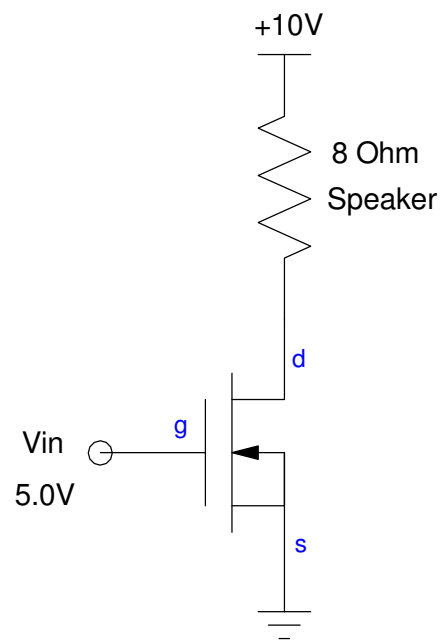

Bonus! What does CircuitLab predict the voltage at V2 is for problem #3?