ECE 320 - Homework #1

EE 206 Review, Phasors. Due Wednesday, Janyary 19th

Please submit as a Word or pdf file if submitting on Blackboard or emailing to Jacob_Glower@yahoo.com with subject ECE 320 HW#1

Resistors in series and parallel

1) Assume X = infinity (DC analysis). Determine the resistance Rab (it will be a real number)

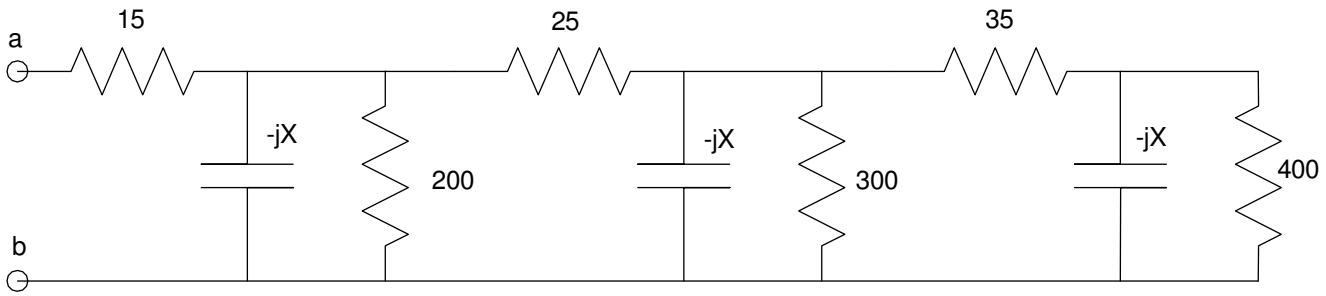

400 + 30 = 435 Ohms series

435 || 300 = 177.55 Ohms parallel

177.55 + 25 = 202.55 Ohms series

202.55 || 200 = 100.63 Ohms parallel

100.63 + 15 = 115.63 Ohms series

ans: 115.63 Ohms

2) Assume -jX = -j100. Determine the resistance Rab (it will be a complex number)

400 || -j100 = 23.529 - j94.118 parallel

(23.529 - j94.118) + (35) = 58.529 - j94.118

(58.529 - j94.118) || (300) || (-j100) = 21.451 - j46.784

(21.451 - j46.784) + (25) = 46.451 - j46.784

(46.451 - j46.784) || (200) || (-j100) = 23.164 - j30.660

(23.164 - j30.660) + (15) = 38.164 - j30.660

ans: 38.164 - j30.660

Voltage Nodes & Current Loops

3) (Voltage Nodes): For the following circuit

- a) Write the voltage node equations
- b) Solve using Matlab (or similar program)
- c) Check your answers in CircuitLab (or similar circuit simulator)

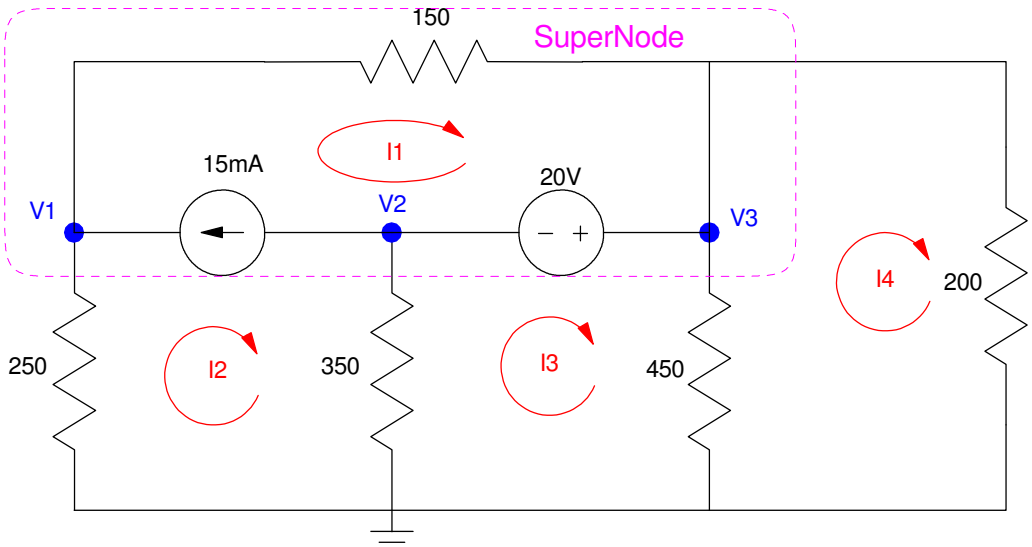

Voltage Node Equations

$$V_3 - V_2 = 20$$

$$\left(\frac{V_1}{250}\right) - 15mA + \left(\frac{V_1 - V_3}{150}\right) = 0$$

SuperNode (others also work)

$$\left(\frac{V_1}{250}\right) + \left(\frac{V_2}{350}\right) + \left(\frac{V_3}{450}\right) + \left(\frac{V_3}{200}\right) = 0$$

Group terms

$$V_3 - V_2 = 20$$

$$\left(\frac{1}{250} + \frac{1}{150}\right) V_1 - \left(\frac{1}{150}\right) V_3 = 15mA$$

$$\left(\frac{1}{250}\right) V_1 + \left(\frac{1}{350}\right) V_2 + \left(\frac{1}{450} + \frac{1}{200}\right) V_3 = 0$$

Place in matrix form

$$\begin{bmatrix} 0 & -1 & 1 \\ \left(\frac{1}{250} + \frac{1}{150}\right) & 0 & \left(\frac{-1}{150}\right) \\ \left(\frac{1}{250}\right) & \left(\frac{1}{350}\right) & \left(\frac{1}{450} + \frac{1}{200}\right) \end{bmatrix} \begin{bmatrix} V_1 \\ V_2 \\ V_3 \end{bmatrix} = \begin{bmatrix} 20 \\ 0.015 \\ 0 \end{bmatrix}$$

Solve using Matlab

```
>> A = [0,-1,1 ; 1/250+1/150,0,-1/150 ; 1/250,1/350,1/450+1/200]

         0   -1.0000    1.0000
    0.0107         0   -0.0067
    0.0040    0.0029    0.0072

>> B = [20;0.015;0]

   20.0000
    0.0150
         0

>> V = inv(A)*B

V1    3.9659
V2  -15.9046
V3    4.0954
```

>>

Check in CircuitLab: The answers match

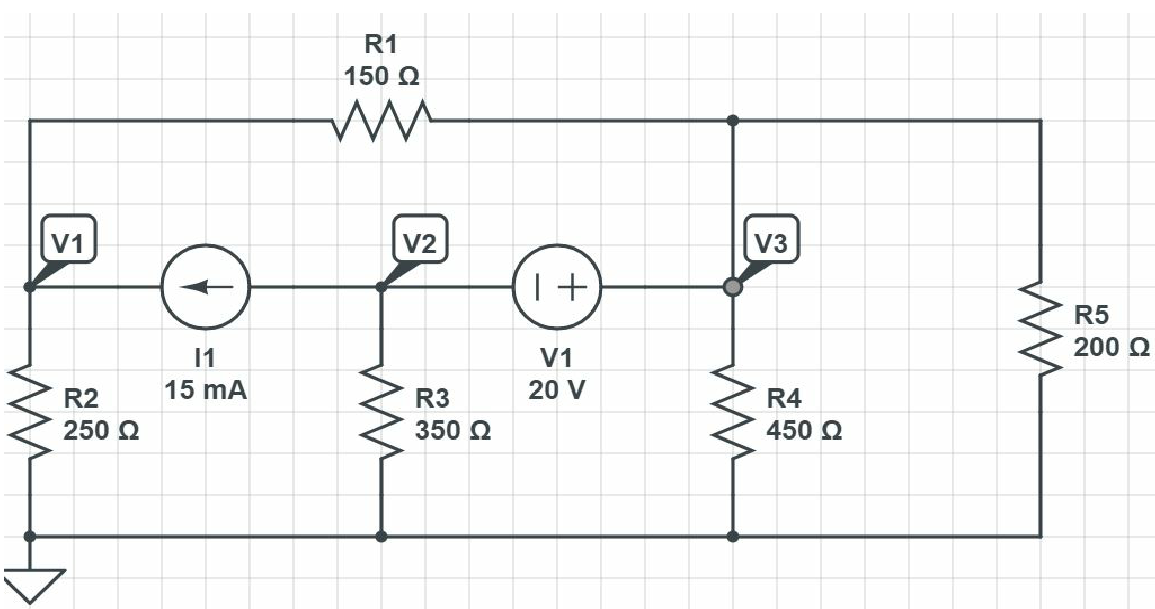

4) (Current Loops) For the following circuit

- a) Write the current loop equations
- b) Solve using Matlab (or similar program)
- c) Check your answers in CircuitLab (or similar circuit simulator)

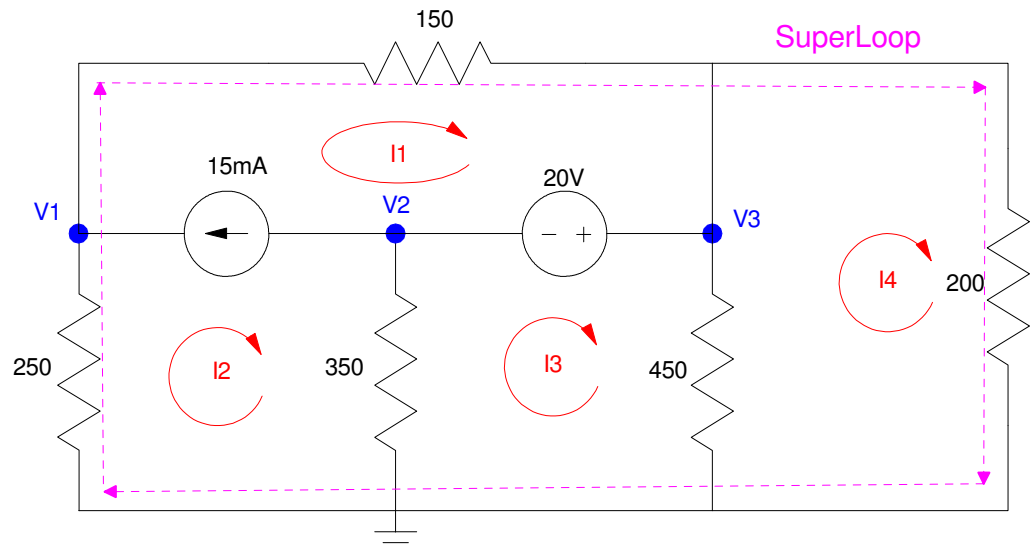

Problem 3 & 4

$$I_1 - I_2 = 15mA$$

$$350(I_3 - I_2) - 20 + 450(I_3 - I_4) = 0$$

$$450(I_4 - I_3) + 200I_4 = 0$$

SuperLoop (other superloops also work)

$$250I_2 + 150I_1 + 200I_4 = 0$$

Group terms

$$I_1 - I_2 = 15mA$$

$$-350I_2 + 800I_3 - 450I_4 = 20$$

$$-450I_3 + 650I_4 = 0$$

$$250I_2 + 150I_1 + 200I_4 = 0$$

Place in matrix form

$$\begin{bmatrix} 1 & -1 & 0 & 0 \\ 0 & -350 & 800 & -450 \\ 0 & 0 & -450 & 650 \\ 150 & 250 & 0 & 200 \end{bmatrix} \begin{bmatrix} I_1 \\ I_2 \\ I_3 \\ I_4 \end{bmatrix} = \begin{bmatrix} 0.015 \\ 20 \\ 0 \\ 0 \end{bmatrix}$$

Solve

```
>> A = [1,-1,0,0 ; 0,-350,800,-450 ; 0,0,-450,650 ; 150,250,0,200]

     1    -1     0     0
     0  -350   800  -450
     0     0  -450   650
   150   250     0   200

>> B = [0.015 ; 20 ; 0 ; 0]

    0.0150
   20.0000
         0
         0

>> I = inv(A)*B

I1   -0.0009
I2   -0.0159
I3    0.0296
I4    0.0205
```

Check in CircuitLab

- I1 is the current through R1 (-863.6uA = -0.0009A rounded)
- I2 is the current through R2 (-15.86mA rounded to -15.9mA)
- I4 is the current through R5 (20.48mA rounded to 20.5mA)
- (I3 - I4) is the current through R4 (9.101mA)

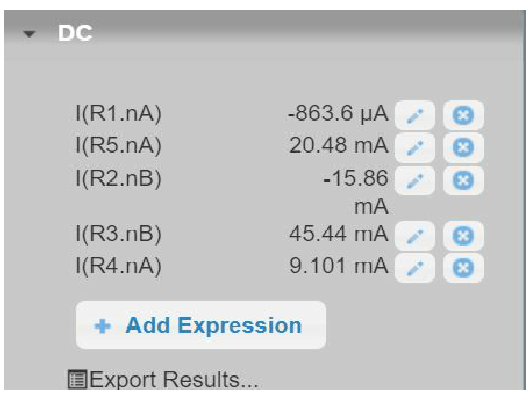

5) Assume Vin contains a DC and 400 rad/sec (63.66Hz) signal:

$$V_{in} = 10 + 6\cos(450t) + 4\sin(450t)$$

- a) Determine the voltage, V2, using phasor analysis
- b) Check your answer using CircuitLab (or similar program)

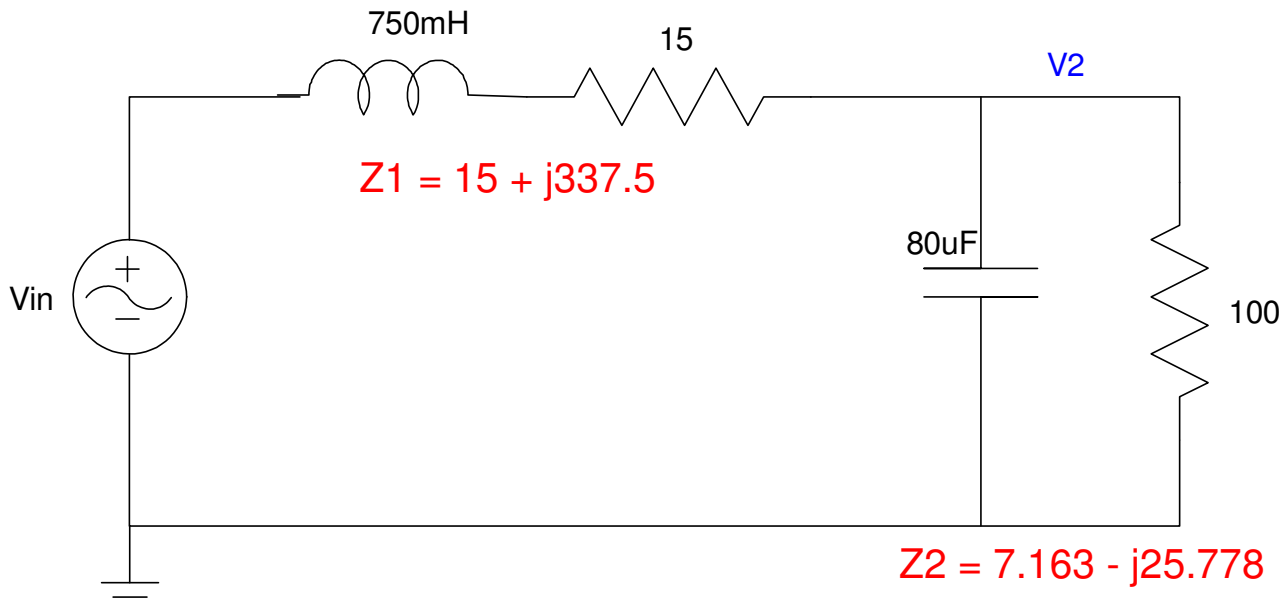

Use superposition: treat this as two separate problems

- Vin = 10
- Vin = 6 cos(450t) + 4 sin(450t)

DC: Vin = 10

L = 0

C = infinity

$$V_2 = \left(\frac{100}{100+15}\right)10 = 8.696V$$

AC: Vin = 6 cos(450t) + 4 sin(450t)

$$\omega = 450$$

$$L \rightarrow j\omega L = j337.5\Omega$$

$$C \rightarrow \frac{1}{j\omega C} = -j27.778\Omega$$

$$V_{in} \rightarrow 6 - j4$$ *real = cosine, -imag = sine*

$$(100\Omega)||(-j27.778\Omega) = (7.163 - j25.788)\Omega$$

$$V_2 = \left(\frac{Z_2}{Z_1+Z_2}\right)V_{in}$$

$$V_2 = \left(\frac{(7.163 - j25.778)}{(7.163 - j25.778) + (15 + j337.5)}\right)(6 - j4) = -0.599 + j0.150$$

$$V_2 = -0.599 + j0.150$$

or in polar form

$$V_2 = 0.618\angle 165.9^0$$

Check in CircuitLab

The votage source is 450 rad/sec

$$f = \frac{\omega}{2\pi} = \frac{450}{2\pi} = 71.62Hz$$

The amplitude using cosine as the base function is:

$$V_{in} = 6 - j4 = 7.211\angle -33.69^0$$

$$V_{in} = 7.211\cos(450t - 33.69^0)$$

CircuitLab uses sine-waves as the reference

$$\cos(\omega t) = \sin(\omega t + 90^0)$$

$$V_{in} = 7.211\sin(450t + 56.31^0)$$

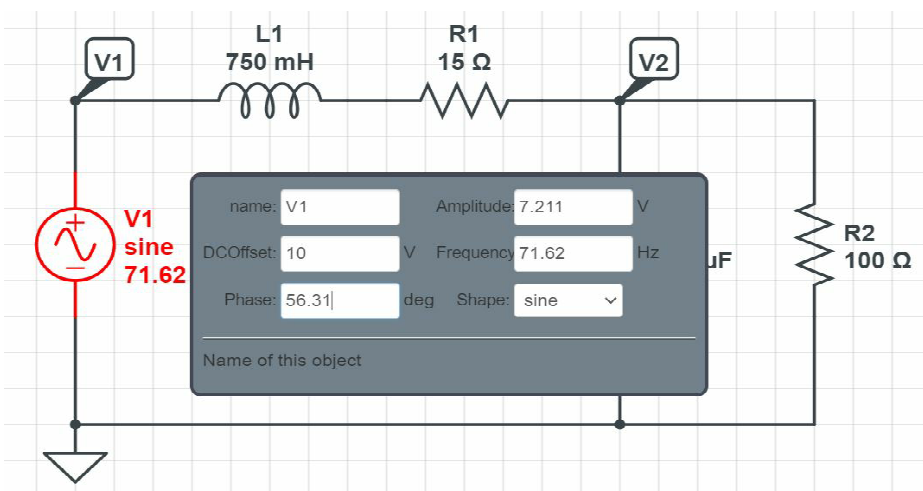

Running a Time Domain simulation from 100ms to 140ms (3 cycles at 71Hz) gives

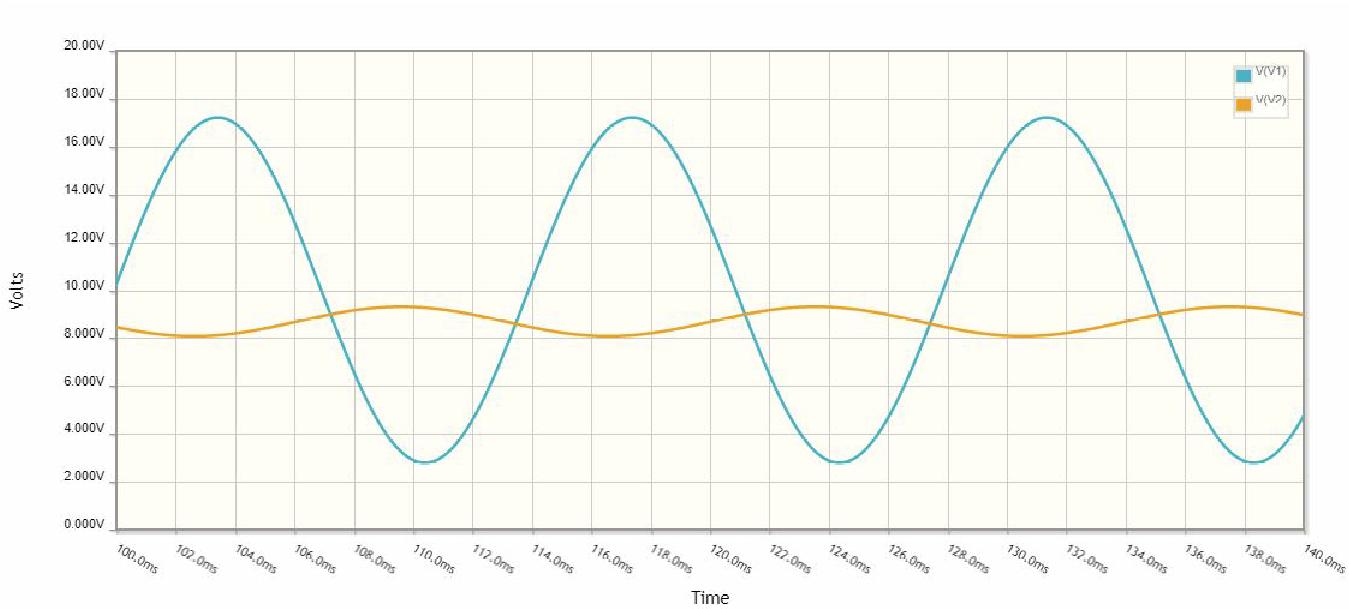

V1 (blue) & V2 (orange)

Checking the results:

- max(V2) = 9.311V
- min(V2) = 8.079V

DC

$$DC = \left(\frac{\text{max+min}}{2}\right) = 8.695V$$

calculated = 8.696V

AC

$$AC = (\text{max}-\text{min}) = 1.232V_{pp}$$

$$= 0.616V_p$$

$$= 0.436V_{rms}$$

Calculations were

$$V_2 = 0.618\angle 165.9^0$$

This is the peak voltage (0.616Vp vs. 0.618Vp)

The phase shows up in the time delay

$$V_1 = 7.211\angle -33.69^0$$

$$V_2 = 0.618\angle 165.9^0 = 0.618\angle -194.1^0$$

V2 is delayed by 160.4 degrees from V1 (shows up in the graph)