ECE 376 - Final Exam: Name _____

Open-Book, Open Note, Calculators and Matlab permitted. Individual Effort.

1a) Binary Outputs:

1a) Give a circuit which allows a PIC to turn on and off a 32mW LED

- Id = 10mA
- Vd = 3.2V

1b) Give a circuit which allows a PIC to turn on and off a 30W LED

- Vd = 10.0V
- Id = 3.0A

2) Analog Inputs: Determine the voltage, resistance, and temperature if a PIC reads 417 on the A/D input for the following circuit. Assume

- R = 1100 + 100*(your birth month) + (your birth date). For example, May 14th would give R = 1514 Ohms.
- Rt is a thermistor with the temperature - resistance relationship (T = temperature in degrees C)

$$R_t = 2000 \cdot \exp\left(\frac{4400}{T+273} - \frac{4400}{298}\right)\Omega$$

R 1100 + 100*mo + day	raw A/D reading	Vx Volts	Rt Ohms	T Degrees C
	417			

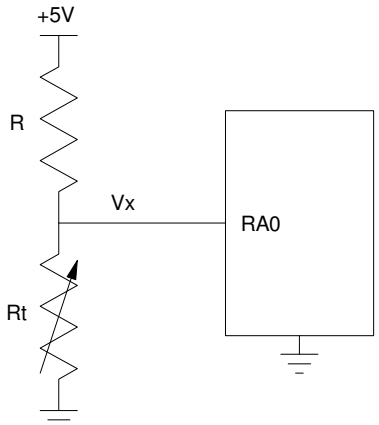

3) C-Coding: Lights Out is a game where

- You start the game by pressing RB0.
- At the start, four random lights are turned on (PORTC = 0..15)
- Once started, you can toggle any light along with its neighbors by pressing buttons RB0/RB1/RB2/RB3
  - For example, if you press RB1, lights RC1 is toggled along with its adjacent lights (toggle RC0/RC1/RC2).
- The goal is to turn all of the light off with the minimum number or button presses.

Write a C program which corresponds with the following flow chart for the game of Lights Out:

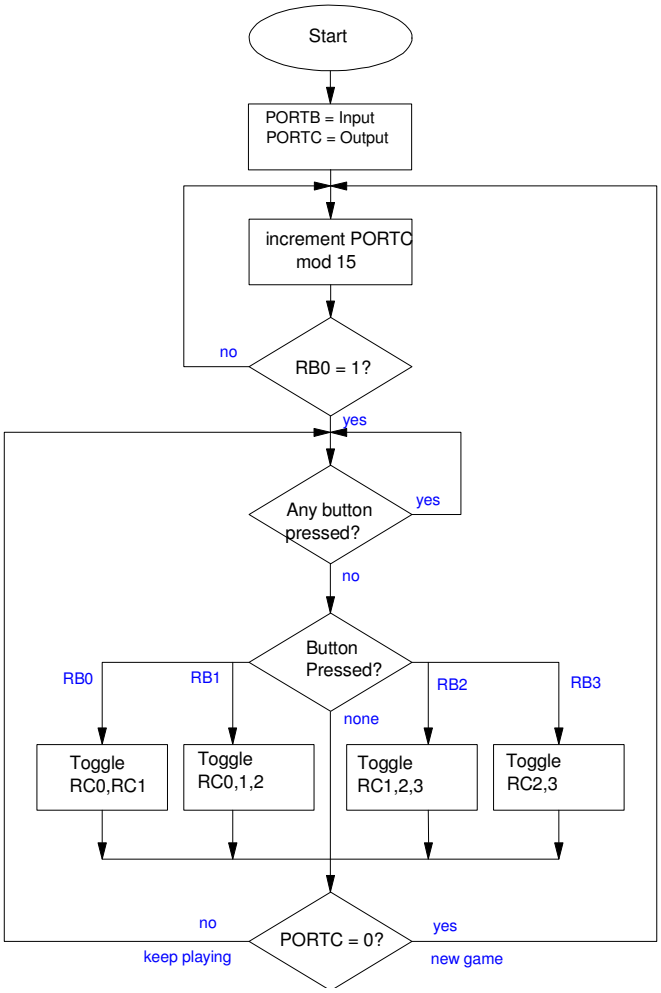

4) C Coding with Analog Inputs: Write a C subroutine which turns your PIC in to a bar-graph for voltage.

When called,

- The subroutine reads the A/D input (0..1023)
- It then turns on LEDs on PORTC:PORTD to display the corresponding voltage as a bar graph:
  - 0V turns off all of the LEDs
  - 1V turns on 1/5th of the LEDs
  - 2V turns on 2/5ths of the LEDs
  - etc.

For example, if 2.00V was input on the A/R reading, the first 6 LEDs on PORTD would turn on.

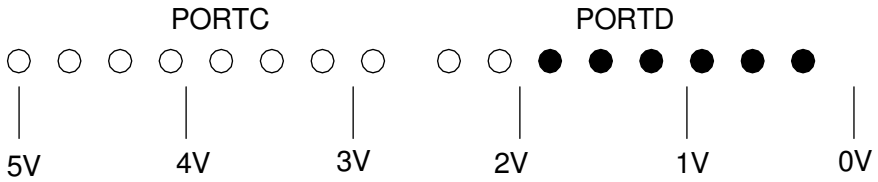


```
void BarGraph(void) {
```

5) Interrupts: Ohmmeters often times have a short-circuit test option. When you select this mode of operation, a tone will play if the resistance you're measuring is less than 1 Ohm.

Assume a 100 Ohm resistor is used for a voltage divider so that an A/D reading of 10 or less corresponds to R < 1 Ohm

Write a C program using Timer2 and Timer0 interrupts to

- Sample the A/D reading every 3.00ms, and
- Play 372Hz if the A/D reading is 10 or less

a) Interrupt Initialization

Timer0 Initialization	Timer2 Initialization		
PS	A	B	C

Timer0 Interrupt Routine Play 372Hz if A/D reading is 10 or less	Timer2 Interrupt Sample the A/D every 3.00ms
`if(TMR0IF) {`	`if(TMR2IF) {`

6) Interrupts: Timer1 Compare. Write the interrupt service routines for a C program which measures how long it takes you to press button connected to RC2 ten times using Timer1 Compare.

- RB0 restarts the game (resets the counter on an INT0 interrupt)
- RB7 goes 0V/5V

6a) Initialization for interrupts

INT0 rising or falling edge?	TIMER1 prescalar = ?	Timer1 Capture 1 rising / falling / 4th rising / 16th rising edge?

6b) Write the interrupt service routines

INT0 resets the counter (new game)	TIMER1	Timer1 Capture 1 counts presses saves time of 10 presses in global variable TIME10
`if(INT0IF) {`	`if(TMR1IF) {`	`if (CCPR1IF) {`