ECE 376 - Test #1: Name _____

Open book, open notes. Calculators and Matlab permitted. Individual effort (help from other people or web sites where other people help you solve the problems not permitted). February 4, 2022

1) **Digital Inputs.** Design a circuit which outputs

- 0V when R < 1200 Ohms
- 5V when R > 1400 Ohms

Assume

- R1 = 900 + 100*(your birth month) + (your birth date).
- May 14th, for example, gives R1 = 1414 Ohms

R = 1200 (V2 = 0V)

$$V_1 = \left(\frac{1200}{1200+1414}\right)5V = 2.295V$$

R = 1400 (V2 = 5V)

$$V_1 = \left(\frac{1400}{1400+1414}\right)5V = 2.488V$$

V2 goes up as V1 goes up. Connect to the plus input

V2 is set when V1 = 2.488V. Make the offset 2.488V

The gain needed is

$$gain = \left(\frac{\text{change in output}}{\text{change in input}}\right) = \left(\frac{5V-0V}{2.488V-2.295V}\right) = 26.01$$

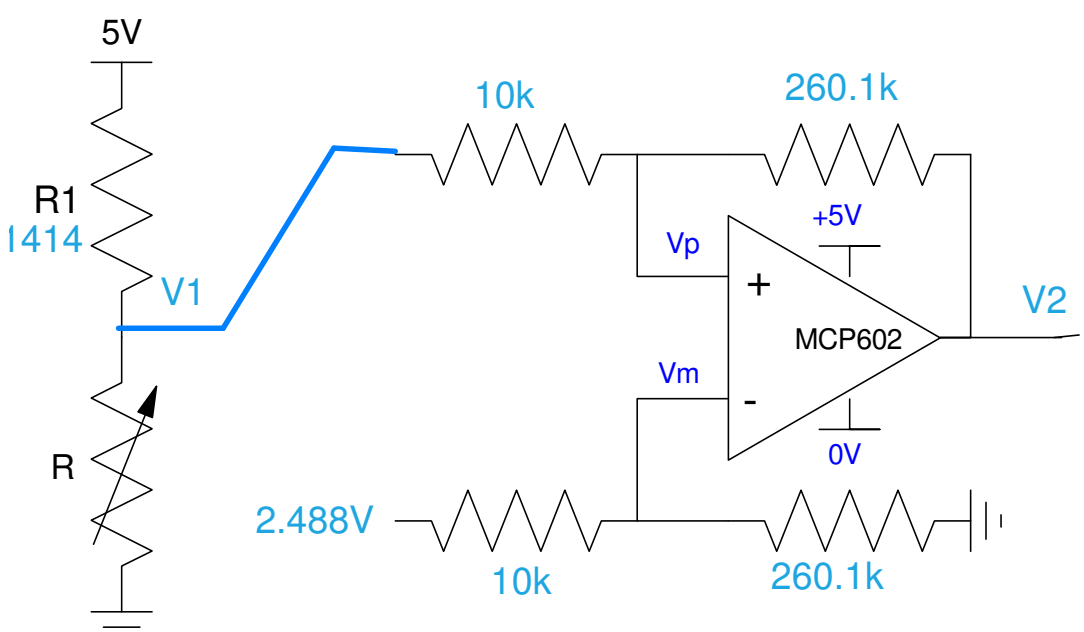

2a) Digital Outputs: Design a circuit which allows your PIC to drive a 10W LED at N mcd

- N = 900 + 100*(your birth month) + (your birth date)
- N = 1414 mcd for May 14th, for example

Assume a 1W LED has the following characteristics

- Vf = 3.2V @ 350mA
- 5,000mcd @ 350mA

Assume a 6144 NPN transistor

- Vbe = 700mV
- Vce(sat) = 360mV
- Current gain = β = 200

N mcd 900 + 100*Month + Day	Ic (mA) current needed to produce N mcd	Rb	Rc
1414 mA	98.98mA	1k Ohms 172 < Rb < 8690	65.1 Ohms

$$I_c = \left(\frac{1414mcd}{5000mcd}\right)350mA = 98.98mA$$

$$R_c = \left(\frac{10V - 3.2V - 0.36V}{98.98mA}\right) = 65.1\Omega$$

$$\left(\frac{I_c}{200}\right) = 0.495mA < I_b < 25mA$$

$$8.69k\Omega > R_b > 172\Omega$$

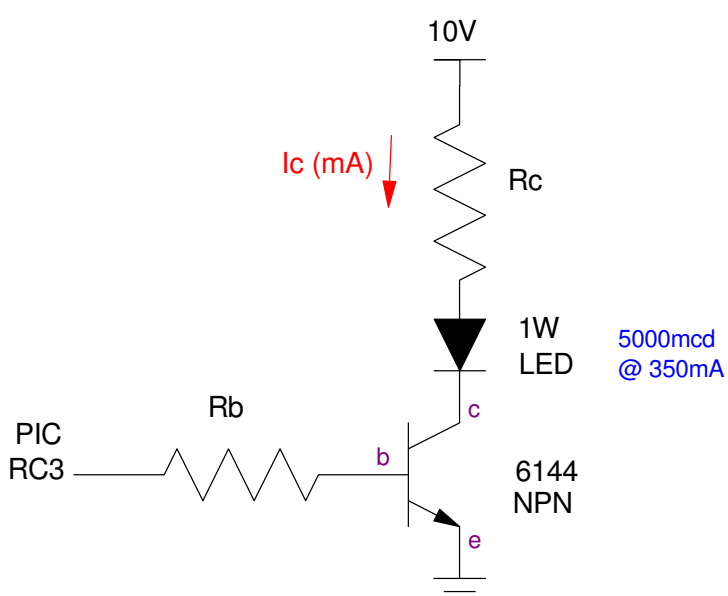

3) **Assembler:** Determine the contents of the W, PORTB, and PORTC registers after each operation. Assume

- PORTB and PORTC are output.
- Default is decimal

	W	PORTB	PORTC
Start:	0	Birth Month (1..12) 5	Birth Date (1..31) 14
incf PORTB,W	6	5	14
decf PORTC,F	6	5	13
movlw 7	7	5	13
addwf PORTB,F	7	12	13
subwf PORTC,W	6	12	13
movlw 7	7 0000 0111	12 0000 1100	13 0000 1101
andwf PORTB,F	7 0000 0111	4 0000 0100	13 0000 1101
iorwf PORTC,W	15 0000 1111	4 0000 0100	13 0000 1101
negf PORTB,F	15 0000 1111	252 (-4) 1111 1100	13 0000 1101
comf PORTC,F	15 0000 1111	252 (-4) 1111 1100	242 (-14) 1111 0010

4) Assembler & Timing:

a) Determine the number of clocks the following assembler subroutine takes to execute.

- Assume MONTH and DAY be your birth month and day.

b) Modify this routine (change A, B, and C) so that it takes 35,000,000 clocks (3.5 seconds) to execute

- +/- 50,000 clocks

Month birth month 1..12	Day birth date 1..31	C	N number of clocks Wait takes
5	14	200	76,909 5*A*B*C + 8*A*B + 9*A + 4
A	B	C	N
107	255	255	35,007,622

```
Wait:
     movlw     MONTH   (A)                          4
     movwf     CNT2
W2:
          movlw     DAY    (B)                      9 * 5
          movwf     CNT1
          nop
          nop
          nop
          nop

W1:
               movlw     200  (C)                   8 * 14 * 5
               movwf     CNT0
               nop
               nop
               nop
W0:
                    nop                             5 * 200 * 14 * 5
                    nop
                    decfsz CNT0,F
                    goto   W0

               decfsz  CNT1,F
               goto    W1

          decfsz    CNT2,F
          goto W2
     return
```

5) Assember & Flow Charts. Write an assembler program to turn your PIC processor into a data encryption device with the encryption method depending upon which button is pressed:

- RB0 = clock change PORTD on a rising edge
- RB1 = 1 PORTD = PORTC + 17
- RB2 = 1 PORTD = PORTC - 17
- otherwise PORTD = PORTC

```
     movlw     0xFF
     movwf     TRISB
     movwf     TRISC
     clrf      TRISD

L1:
     btfss     PORTB,0
     goto      L1

L2:
     btfsc     PORTB,1
     goto L3
     btfsc     PORTB,2
     goto L4
L5:
     movff     PORTC,PORTD
     goto      L6
L3:
     movlw     17
     addwf     PORTC,W
     movwf     PORTD
     goto      L6
L4:
     movlw     17
     subwf     PORTC,W
     movwf     PORTD
L6:
     btfsc     PORTB,0
     goto      L6

     goto      L1
```