Homework #2: ECE 461 / 661

State Transitional Logic Timers:. Due Monday, September 9th

Starter Tree

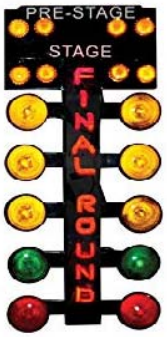

1) Write a ladder logic program to implement the following function.

2) Test your program (collect data on its timing)

3) Demo your program (in person or with a video)

Starter Tree: Program a PLC to implement a starter tree

Inputs:

- DI0: Clear the lights, reset time to zero
- DI1: Start the race

Outputs:

- Relays 0, 1, 2, 3

Relationship:

- When you press Button #1, the lights turn on sequentially, one per second.
- After 3.00 seconds, all lights are on.
- All lights remain on until button 0 is pressed.

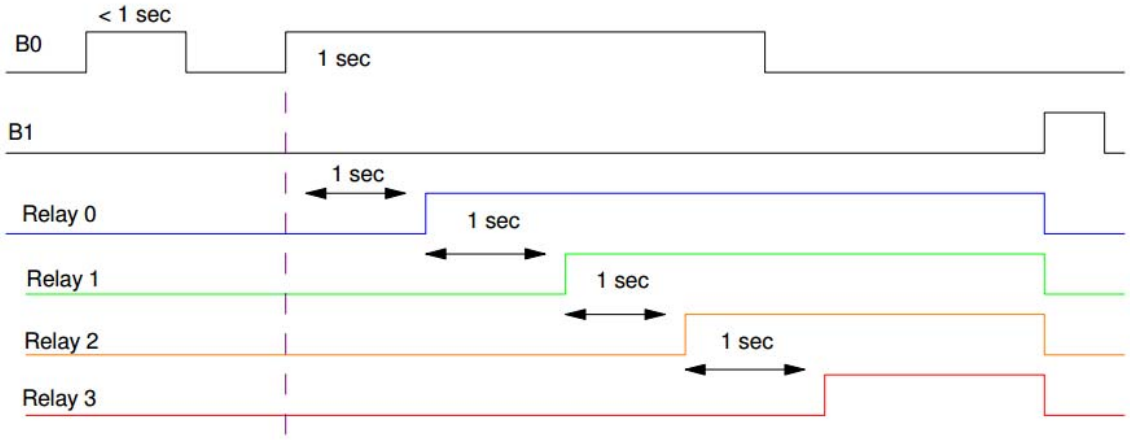

There are many ways to sovle this problem. One solution is below.

Line 1:

- TON_1 turns on a local variable, *StartRace (IN-0)*, when *Start* is pressed and held for 1 second.
- Once *StartRace = True*, feedback keeps it true
- If you press *Clear (IN-1)*, StartRace clears.

Line 2:

- Once StartRace = True, the starter tree begins. The red light turns on 1 second later and stays on as long as StartRace = True.

Line 3:

- After 2 seconds, the yellow light turns on and stays on (until you press clear)

Line 4:

- After 3 seconds, the green light turns on and stays on (until you press clear)

Line 5:

- After 4 seconds, the blue light turns on and stays on (until you press clear)