ECE 463 / 663 - Test #3: Name _____

Calculus of Variations and Optimal Control

1) Given the following funcion:

$$F = 9\dot{x}^2 + x^2$$

1a) Solve the Euler LaGrange equation:

$$F_x - \frac{d}{dt}(F_{\dot{x}}) = 0$$

1b) Find x(t) given the constraints

- $x(0) = 10$
- $\frac{dx}{dt}(2) = 0$ *(meaning x(2) = free)*

2) Given the following function:

$$F = x^2 + 9u^2 + m(x + 3u - \dot{x})$$

2a) Solve the Euler LaGrange equation with respect to x:

$$F_x - \frac{d}{dt}(F_{\dot{x}}) = 0$$

2b) Solve the Euler LaGrange equation with respect to u:

$$F = x^2 + 9u^2 + m(x + 3u - \dot{x})$$

$$F_u - \frac{d}{dt}(F_{\dot{u}}) = 0$$

(cont'd)

2c) Solve the Euler LaGrange equation with respect to m:

$$F = x^2 + 9u^2 + m(x + 3u - \dot{x})$$

$$F_m - \frac{d}{dt}(F_{\dot{m}}) = 0$$

2d) Solve for x(t) given the constraints:

- x(0) = 10
- x(2) = 0

3) Convert the following block diagram to a state-space:

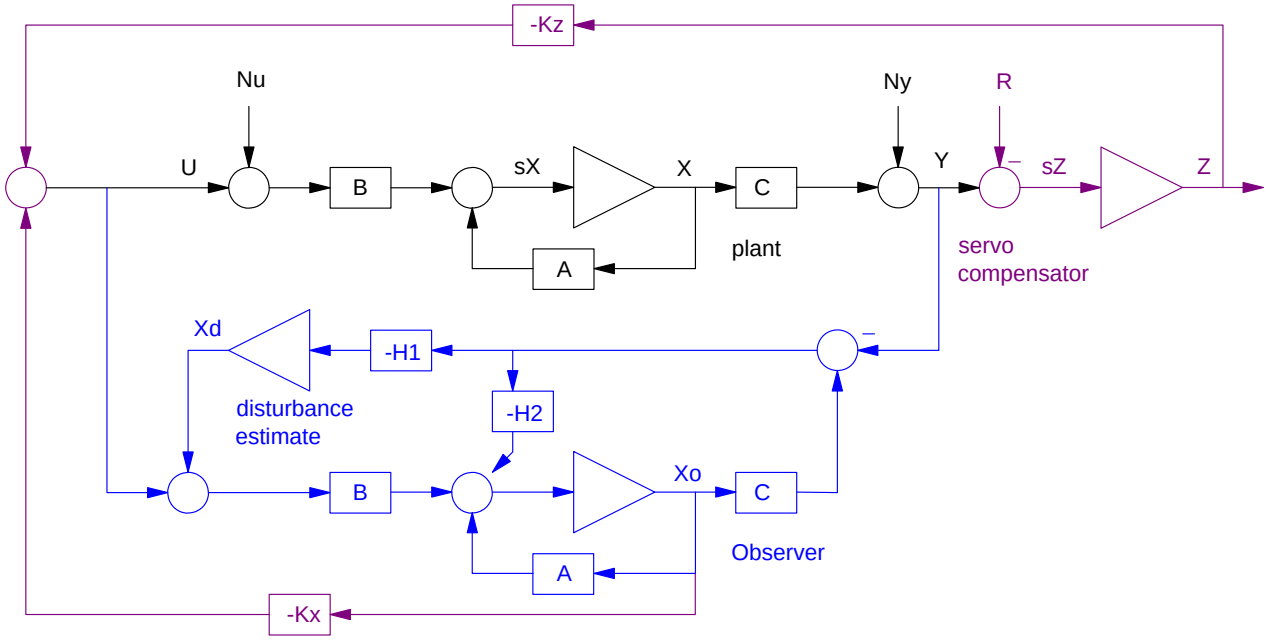

$$\begin{bmatrix} sX \\ sXo \\ sXd \\ sZ \end{bmatrix} = \begin{bmatrix} & & & \\ & & & \\ & & & \\ & & & \end{bmatrix} \begin{bmatrix} X \\ Xo \\ Xd \\ Z \end{bmatrix}$$

$$+ \begin{bmatrix} & & \\ & & \\ & & \\ & & \end{bmatrix} \begin{bmatrix} R \\ Nu \\ Ny \end{bmatrix}$$