Superposition

EE 206 Circuits I

Jake Glower - Lecture #12

Please visit Bison Academy for corresponding lecture notes, homework sets, and solutions

Superposition

- A circuit composed of resistors, inductors, capacitors, voltage sources, current sources, and dependent sources is a linear system.
- Linear systems have the property

$$f(a+b) = f(a) + f(b)$$

Meaning....

- If a circuit has two or more inputs,
- You treat this as two separate circuits, each with just one of the inputs.
- The net voltages (and currents) will be the sum of the separate problems

This is called *superposition*

Example 1:

$$V_0 = 10$$

$$\left(\frac{V_1 - V_0}{10}\right) + \left(\frac{V_1}{100}\right) + \left(\frac{V_1 - V_2}{20}\right) = 0$$

$$\left(\frac{V_2 - V_1}{20}\right) + \left(\frac{V_2}{200}\right) + \left(\frac{V_2 - V_3}{30}\right) = 0$$

$$\left(\frac{V_3 - V_2}{30}\right) + \left(\frac{V_3}{300}\right) + \left(\frac{V_3 - V_4}{40}\right) = 0$$

$$\left(\frac{V_4 - V_3}{40}\right) + \left(\frac{V_4}{400}\right) = 0$$

$$V_4 = 5$$

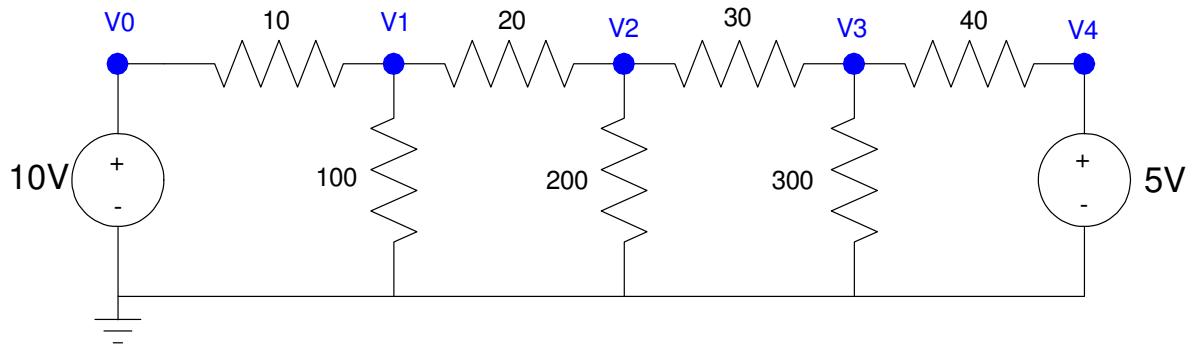

Result

	V0	V1	V2	V3	V4
V0 = 10V V4 = 5V	10.00 V	8.42 V	6.95 V	5.78 V	5.00 V

Superposition (take 1):

- V0 = on
- V4 = off

	V0	V1	V2	V3	V4
V0 = 10V V4 = 0V	10.00V	8.04 V	5.71 V	3.09 V	0.00 V

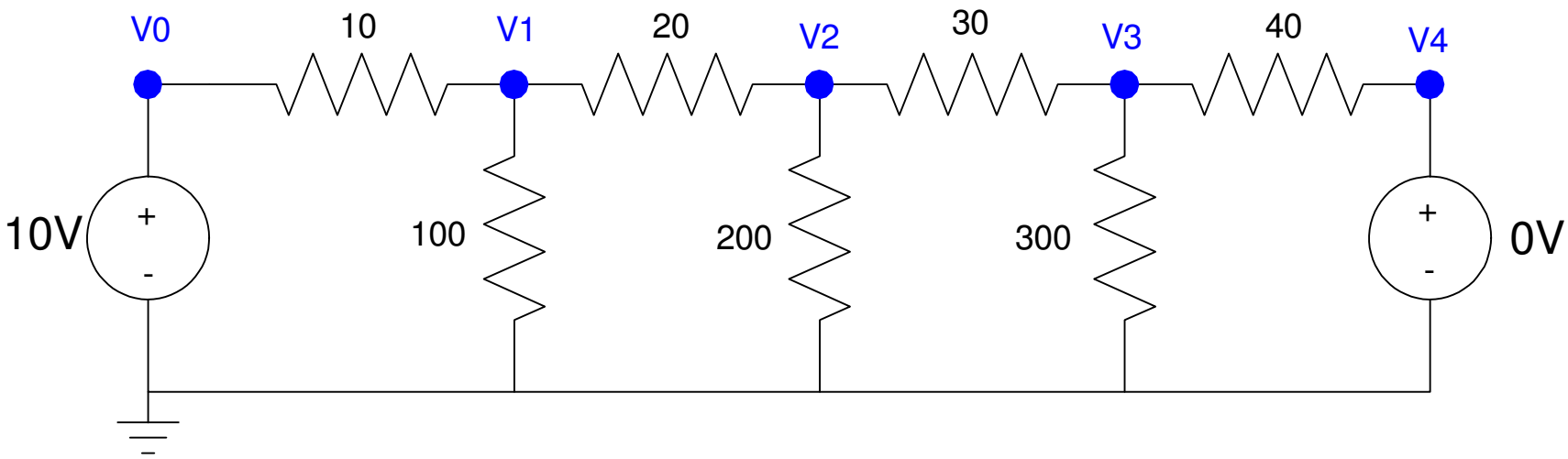

Superpositon (take 2)

- V0 = off
- V4 = on

	V0	V1	V2	V3	V4
V0 = 0V V4 = 5V	0.00 V	0.386 V	1.24 V	2.69 V	5.00 V

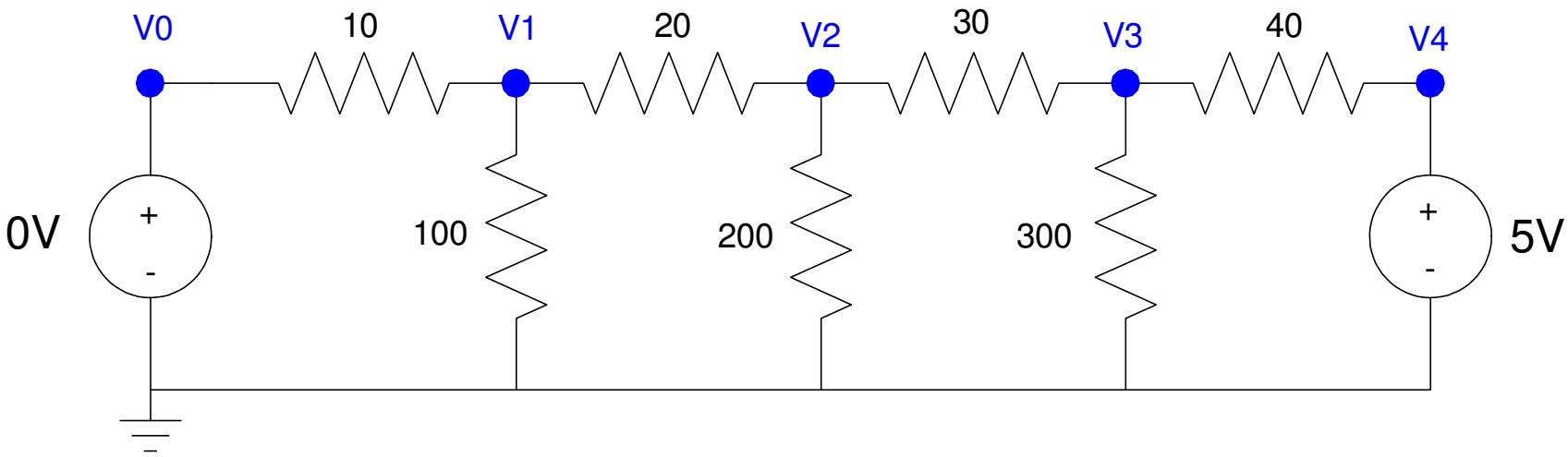

Superposition (take 3)

Note that the voltages add up

	V0	V1	V2	V3	V4
V0 = 10V, V4 = 0V	10.00V	8.04 V	5.71 V	3.09 V	0.00 V
V0 = 0V V4 = 5V	0.00 V	0.386 V	1.24 V	2.69 V	5.00 V
V0 = 10V V4 = 5V	10.00 V	8.42 V	6.95 V	5.78 V	5.00 V

Example 2: R-2R Ladder.

Determine Y as a funciton of A, B, C, and D

By superposition, we know that

$$Y = aA + bB + cC + dD$$

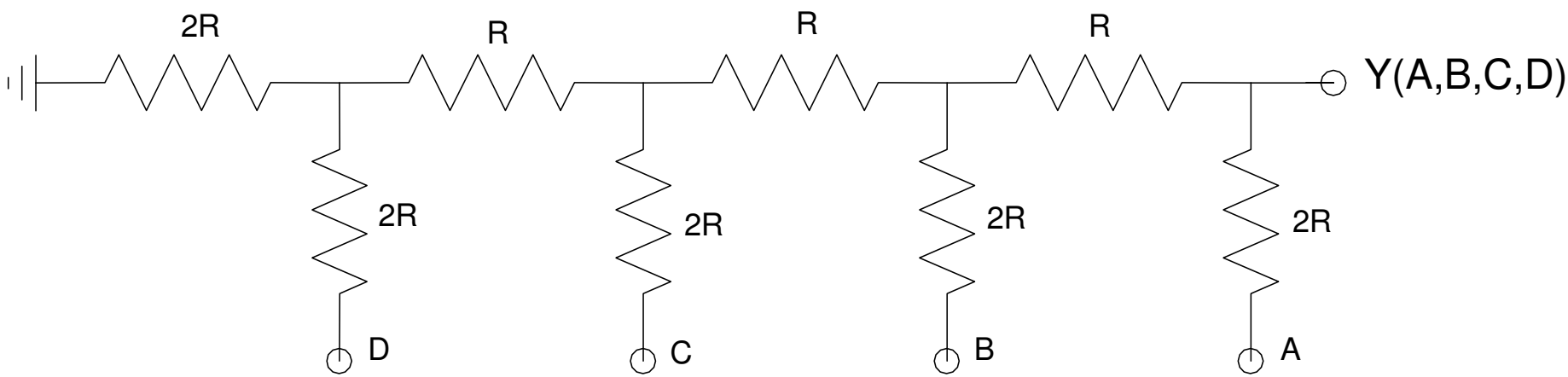

Case 1: A = 1, B = C = D = 0.

- Take the Thevenin equivalent of the circuit looking left at x. All you see is 2R ‖ 2R = R to ground.
- Repeat at y. All you see is 2R ‖ 2R = R to ground.
- Repeat at z. All you see is 2R ‖ 2R = R to ground.
- By voltage division, Y = 1/2 volt.

a = 1/2

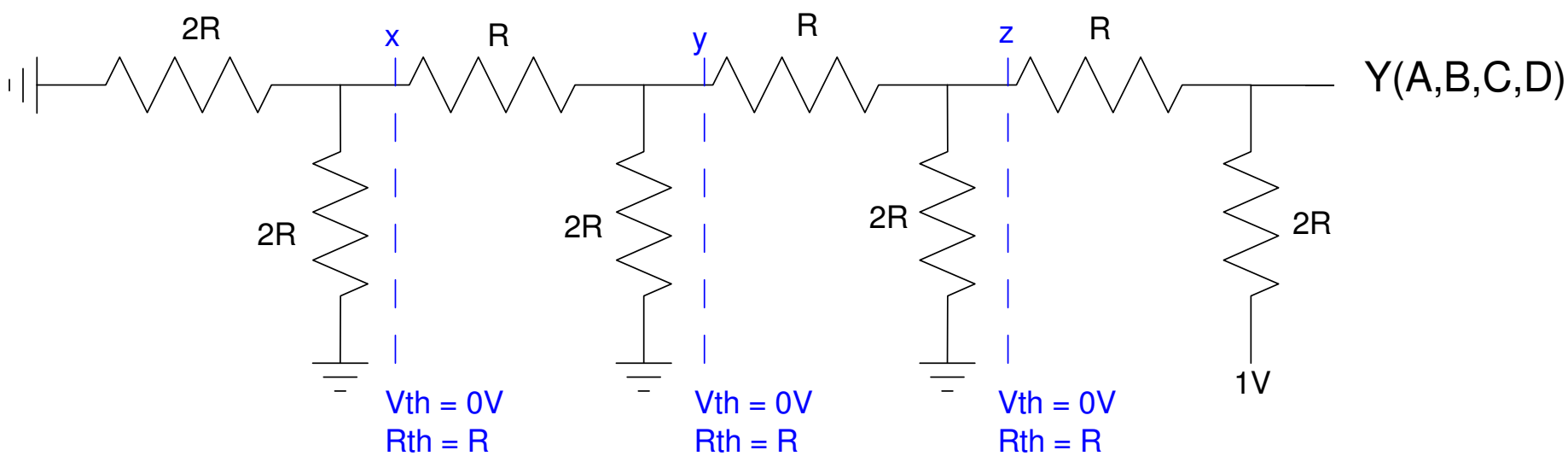

Case 2: A = 0, B = 1, C = D = 0.

- At w looking left, all you see is 2R || 2R = R
- At x looking left, all you see is 2R || 2R = R
- At y looking left, all you get
  - Rth = 2R || 2R = R Vth = 1/2 V
- At z looking left, you get
  - Rth = 2R || 2R = R Vth = 1/2 * 1/2 = 1/4

b = 1/4

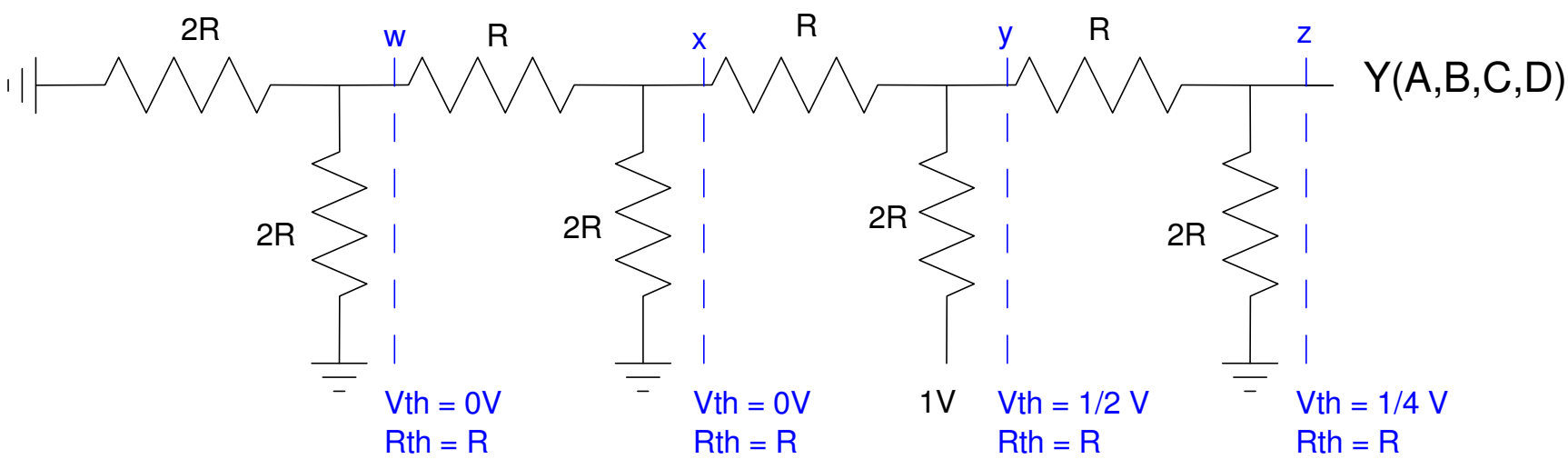

Case 3: A = B = D = 0. C = 1.

- Taking the Thevenin equivalents looking left, you wind up with
- Y = 1/8 V (c = 1/8)

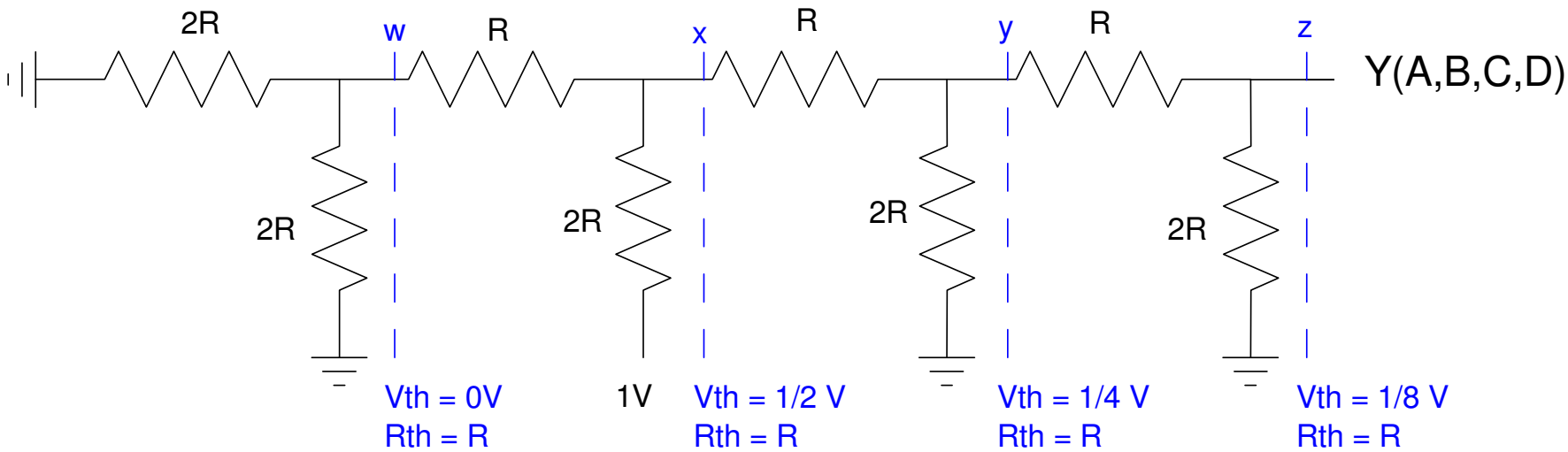

The net result is

$$Y = \left(\frac{1}{2}\right)A + \left(\frac{1}{4}\right)B + \left(\frac{1}{8}\right)C + \left(\frac{1}{16}\right)D$$

- This circuit converts a binary number into an analog voltage

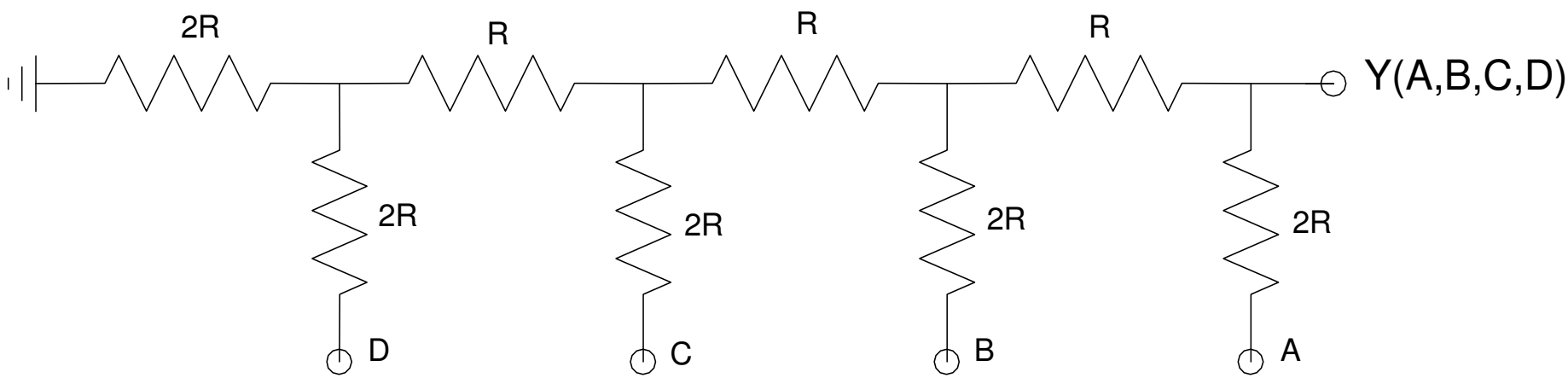

Example 3: Weighted Average

Case 1: Design a circuit so that Y is the average of { A, B, C }

$$Y = \left(\frac{A+B+C}{3}\right)$$

By symmetry, use three resistors:

$$\left(\frac{Y-A}{R}\right) + \left(\frac{Y-B}{R}\right) + \left(\frac{Y-C}{R}\right) = 0$$

$$3Y = A + B + C$$

$$Y = \left(\frac{A+B+C}{3}\right)$$

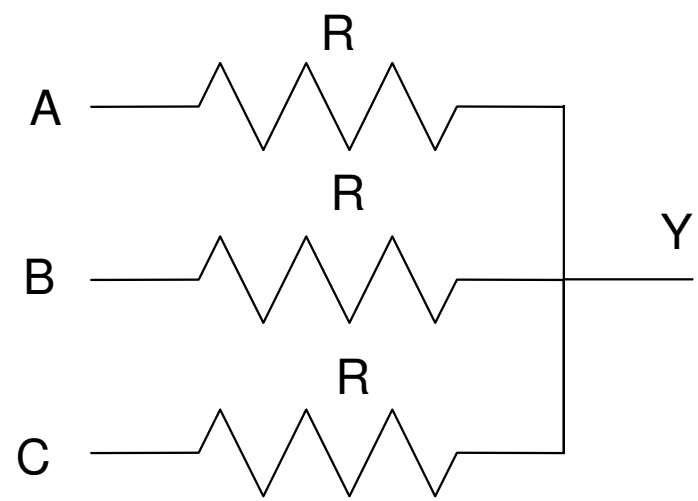

Case 2: Design a circuit so that Y is the weighted average:

$$Y = \left(\frac{2A+B+C}{4}\right)$$

Solution: Add A twice. This is equivalent to reducing R by 2:

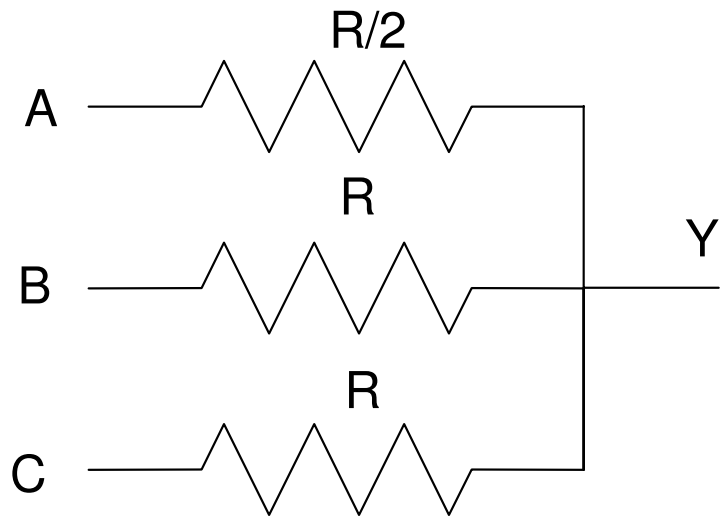

Case 3: Design a circuit to implement

$$Y = \left(\frac{aA+bB+cC}{a+b+c} \right)$$

Solution:

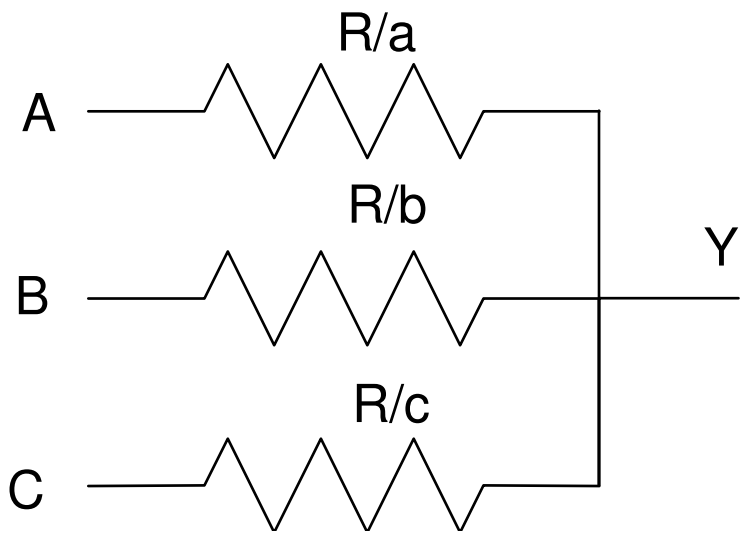

Y is the weighted average of A, B, C

Example: Level Shifting

- Let A be an analog signal in the range of (-10V, +10V)

Design a circuit to shift this voltage to the range of 0..5V.

Solution: Y is related to A as

$$Y = \frac{1}{4}A + 2.5$$

Rewrite as

$$Y = \frac{1}{4}A + \frac{1}{2}(5V) + \frac{1}{4}(0V)$$

$$Y = \left(\frac{1\cdot(A)+2(\cdot 5V)+1\cdot(0V)}{4}\right)$$